ＣⅡ－ｂ　　断面

標 準 断 面

爆破掘削

ＣⅡ－ｂ　　断面

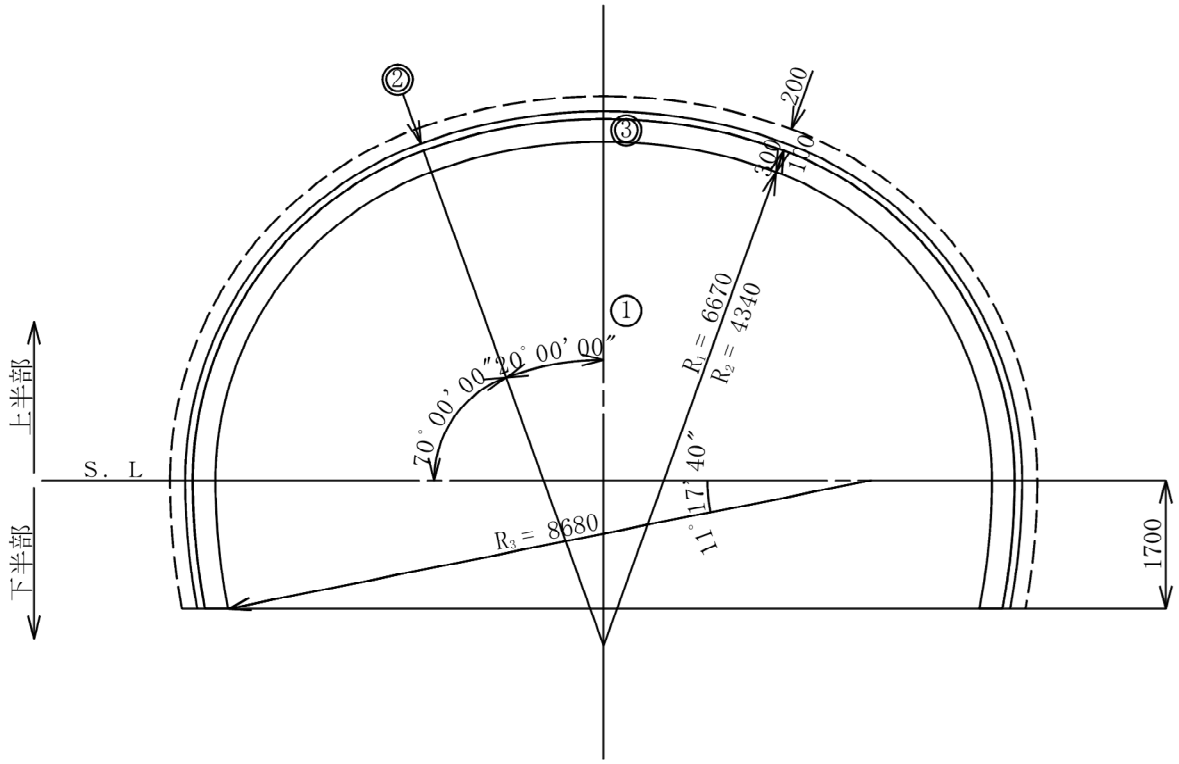

名　　称		掘　削　（m³/m）		吹　付　け コンクリート （m²/m）	コンクリート（m³/m）	
		設　計	支　払		設　計	支　払
①	全断面	61.797	65.847			
②	全断面吹付けコンクリート			19.625		
③	覆工コンクリート				5.746	8.324
合　　計		61.797	65.847	19.625	5.746	8.324

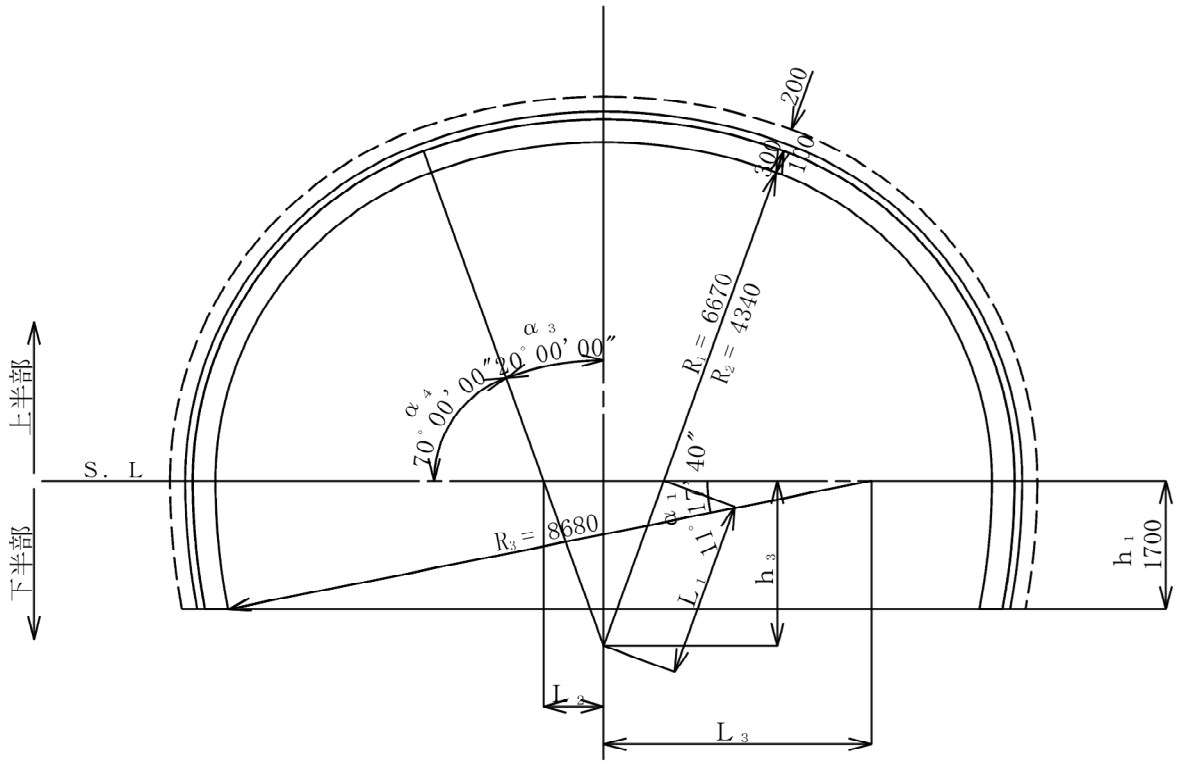

諸元寸法

R_1 = 6.670, R_2 = 4.340, R_3 = 8.680

覆工厚 t_0 = 0.300, 吹付厚 t_2 = 0.100

α_1 = 11°.2945306, α_3 = 20°.0000000, α_4 = 70°.0000000

h_1 = 1.700, 余掘 t = 0.200

$L_1 = R_1 - R_2 = 6.670 - 4.340 = 2.330$

$L_2 = L_1 \times \sin \alpha_3 = 2.330 \times \sin 20°.0000000 = 0.796907$

$L_3 = (R_3 - R_2) - L_2 = (8.680 - 4.340) - 0.796907 = 3.543093$

$h_3 = L_1 \times \cos \alpha_3 = 2.330 \times \cos 20°.0000000 = 2.189484$

1） 掘 削

（1） 設計断面

a． 上部半断面

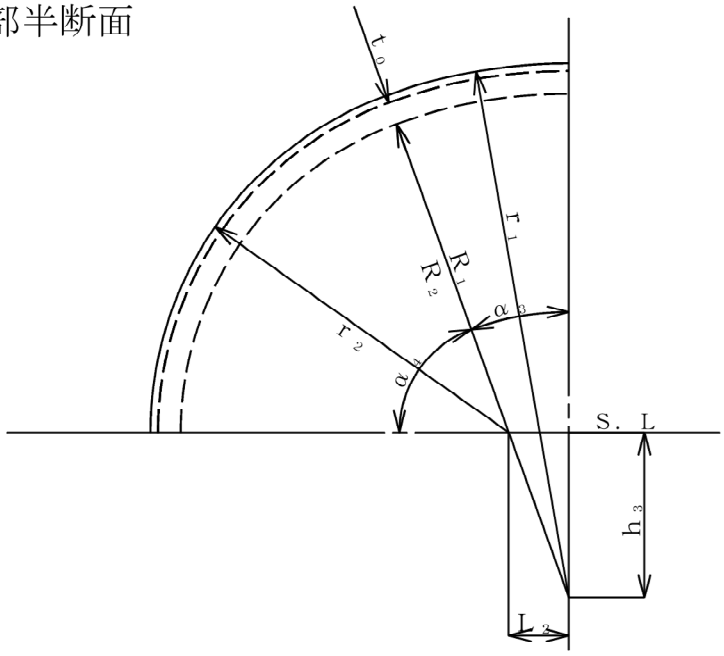

R_1 = 6.670, R_2 = 4.340, 覆工厚 t_0 = 0.300
変形余裕量 t_1 = 0.000, 吹付厚 t_2 = 0.100
α_3 = 20°.0000000, α_4 = 70°.0000000
諸元寸法より　　L_2 = 0.796907, h_3 = 2.189484

$r_1 = R_1 + t_0 + t_1 + t_2$
$= 6.670 + 0.300 + 0.000 + 0.100 = 7.070$
$r_2 = R_2 + t_0 + t_1 + t_2$
$= 4.340 + 0.300 + 0.000 + 0.100 = 4.740$

$Va\text{-}1 = (\pi \times r_1^2 \times \alpha_3 / 360^\circ - 1/2 \times L_2 \times h_3) \times 2$
$= (\pi \times 7.070^2 \times 20^\circ.0000000 / 360^\circ - 1/2 \times 0.796907 \times 2.189484) \times 2 = 15.703206$
$Va\text{-}2 = \pi \times r_2^2 \times \alpha_4 / 360^\circ \times 2$
$= \pi \times 4.740^2 \times 70^\circ.0000000 / 360^\circ \times 2 = 27.449352$

$Va = Va\text{-}1 + Va\text{-}2 = 15.703206 + 27.449352 = 43.152558$
$= 43.153\ m^3/m$

b． 下部半断面

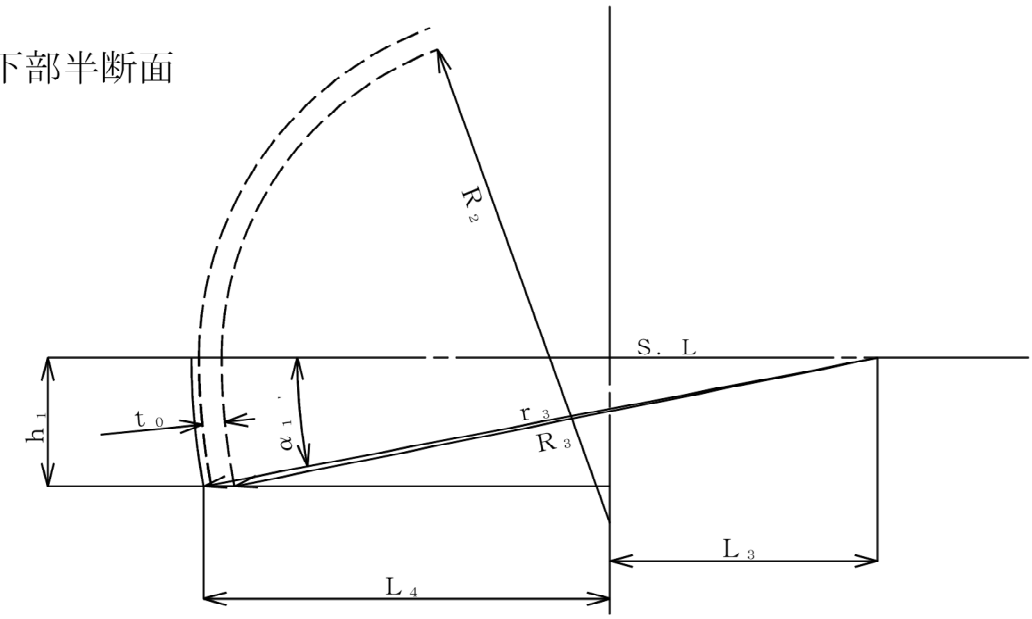

R_2 = 4.340, R_3 = 8.680, 覆工厚 t_0 = 0.300, h_1 = 1.700
変形余裕量 t_1 = 0.000, 吹付厚 t_2 = 0.100
諸元寸法より　　L_3 = 3.543093

$$r_3 = R_3 + t_0 + t_1 + t_2$$
$$= 8.680 + 0.300 + 0.000 + 0.100 = 9.080$$

$$L_4 = \sqrt{r_3^2 - h_1^2} - L_3 = \sqrt{9.080^2 - 1.700^2} - 3.543093 = 5.376346$$

$$\alpha_1' = \sin^{-1}\frac{h_1}{r_3} = \sin^{-1}\frac{1.700}{9.080} = 10.^{\circ}7908632$$

$$Vb\text{-}1 = \pi \times r_3^2 \times \alpha_1' / 360^{\circ} - 1/2 \times (L_3 + L_4) \times h_1$$
$$= \pi \times 9.080^2 \times 10.^{\circ}7908632 / 360^{\circ}$$
$$- 1/2 \times (3.543093 + 5.376346) \times 1.700 = 0.182293$$
$$Vb\text{-}2 = L_4 \times h_1 = 5.376346 \times 1.700 = 9.139788$$

$$Vb = (Vb\text{-}1 + Vb\text{-}2) \times 2$$
$$= (0.182293 + 9.139788) \times 2 = 18.644162$$
$$= \underline{18.644\ m^3/m}$$

（２）　支払断面

ａ．上部半断面

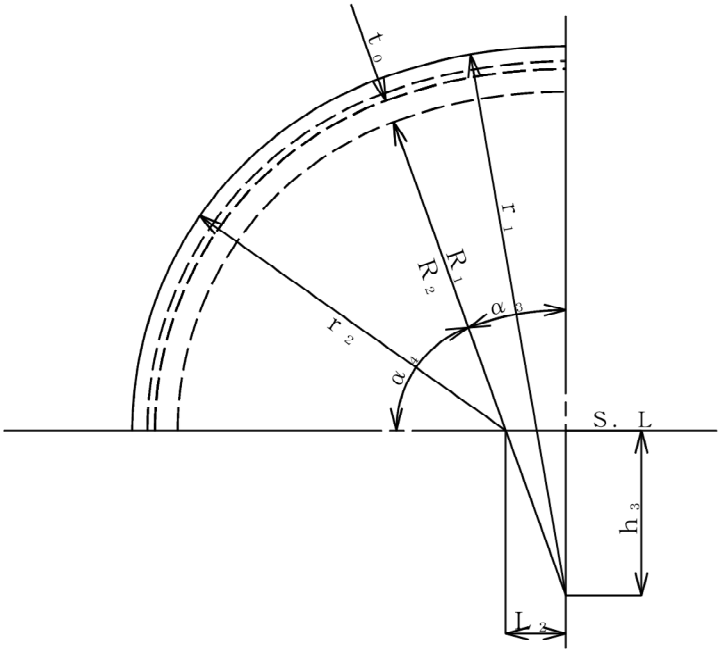

R_1 = 6.670, R_2 = 4.340, 覆工厚 t_0 = 0.300
変形余裕量 t_1 = 0.000, 吹付厚 t_2 = 0.100
余掘 t = 0.200
α_3 = 20°.0000000, α_4 = 70°.0000000
諸元寸法より　　L_2 = 0.796907, h_3 = 2.189484

$r_1 = R_1 + t_0 + t_1 + t_2 + t$
$= 6.670 + 0.300 + 0.000 + 0.100 + 0.200 = 7.270$
$r_2 = R_2 + t_0 + t_1 + t_2 + t$
$= 4.340 + 0.300 + 0.000 + 0.100 + 0.200 = 4.940$

$Vsa\text{-}1 = (\pi \times r_1^2 \times \alpha_3 / 360° - 1/2 \times L_2 \times h_3) \times 2$
$= (\pi \times 7.270^2 \times 20°.0000000 / 360°$
$- 1/2 \times 0.796907 \times 2.189484) \times 2 = 16.704327$
$Vsa\text{-}2 = \pi \times r_2^2 \times \alpha_4 / 360° \times 2$
$= \pi \times 4.940^2 \times 70°.0000000 / 360° \times 2 = 29.814622$

$Vsa = Vsa\text{-}1 + Vsa\text{-}2 = 16.704327 + 29.814622 = 46.518949$
$= 46.519\ m^3/m$

b．下部半断面

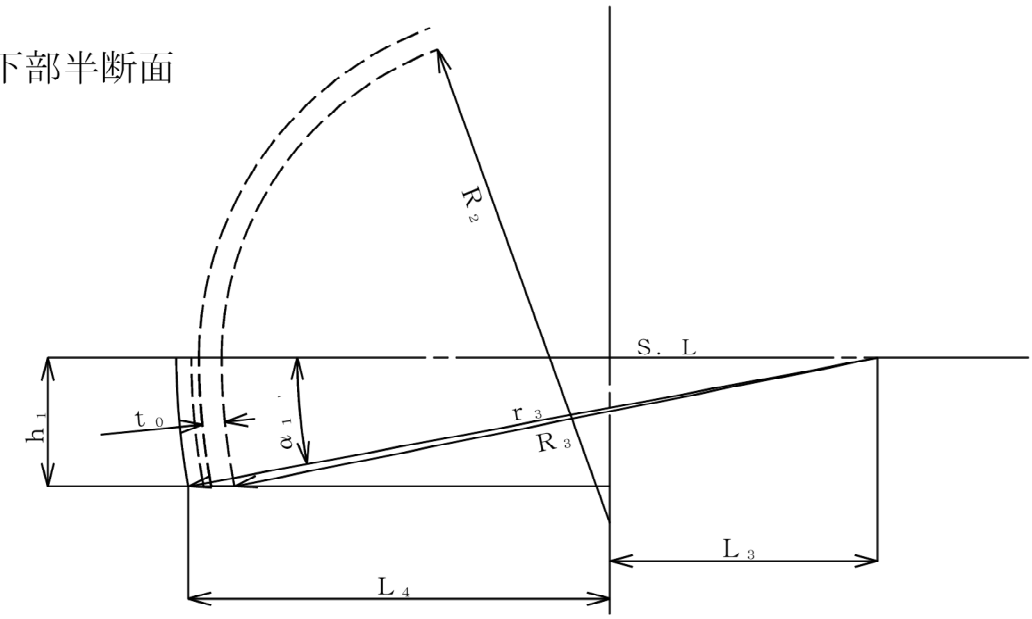

R_2 = 4.340, R_3 = 8.680, 覆工厚 t_0 = 0.300
変形余裕量 t_1 = 0.000, 吹付厚 t_2 = 0.100
余掘 t = 0.200, h_1 = 1.700
諸元寸法より　　L_3 = 3.543093

$$r_3 = R_3 + t_0 + t_1 + t_2 + t$$
$$= 8.680 + 0.300 + 0.000 + 0.100 + 0.200 = 9.280$$

$$L_4 = \sqrt{r_3^2 - h_1^2} - L_3 = \sqrt{9.280^2 - 1.700^2} - 3.543093 = 5.579867$$

$$\alpha_1' = \sin^{-1}\frac{h_1}{r_3} = \sin^{-1}\frac{1.700}{9.280} = 10.^\circ 5556036$$

$$Vsb\text{-}1 = \pi \times r_3^2 \times \alpha_1' / 360^\circ - 1/2 \times (L_3 + L_4) \times h_1$$
$$= \pi \times 9.280^2 \times 10.^\circ 5556036 / 360^\circ$$
$$- 1/2 \times (3.543093 + 5.579867) \times 1.700 = 0.178282$$

$$Vsb\text{-}2 = L_4 \times h_1 = 5.579867 \times 1.700 = 9.485774$$

$$Vsb = (Vsb\text{-}1 + Vsb\text{-}2) \times 2$$
$$= (0.178282 + 9.485774) \times 2 = 19.328112$$
$$= 19.328\ m^3/m$$

2）　吹付けコンクリート

a．上部半断面

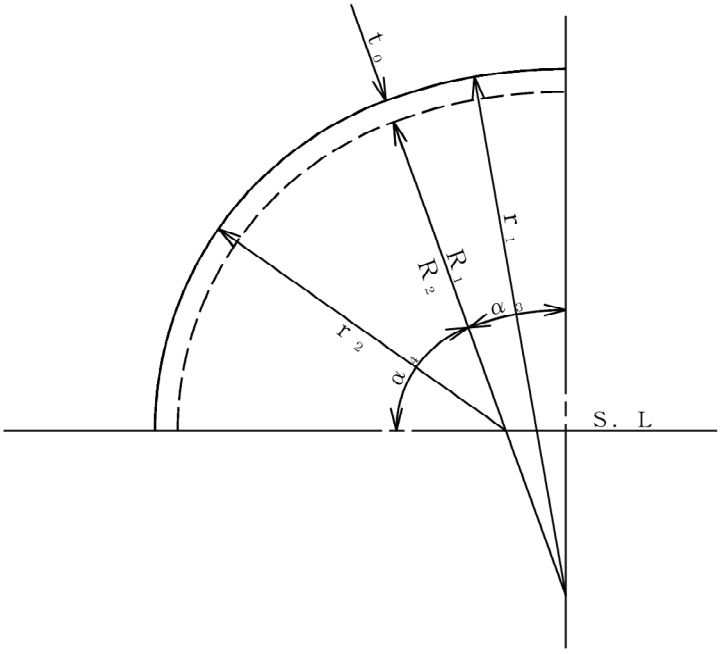

R_1 = 6.670，R_2 = 4.340，覆工厚 t_0 = 0.300
変形余裕量 t_1 = 0.000，吹付厚 t_2 = 0.100
α_3 = 20°.0000000，α_4 = 70°.0000000

$r_1 = R_1 + t_0 + t_1 = 6.670 + 0.300 + 0.000 = 6.970$
$r_2 = R_2 + t_0 + t_1 = 4.340 + 0.300 + 0.000 = 4.640$

$Fa1 = 2\pi \times r_1 \times \alpha_3 / 360° \times 2$
$= 2\pi \times 6.970 \times 20°.0000000 / 360° \times 2 = 4.865978$
$Fa2 = 2\pi \times r_2 \times \alpha_4 / 360° \times 2$
$= 2\pi \times 4.640 \times 70°.0000000 / 360° \times 2 = 11.337659$

$Fa = Fa1 + Fa2 = 4.865978 + 11.337659 = 16.203637$
$= 16.204\ m^2/m$

b． 下部半断面

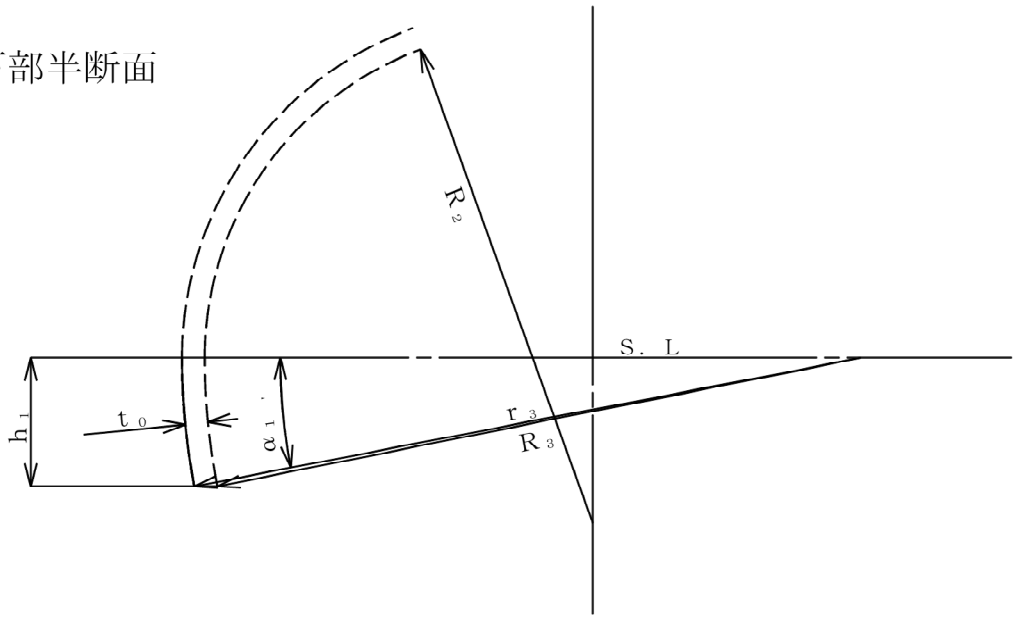

R_2 = 4.340, R_3 = 8.680, 覆工厚 t_0 = 0.300, h_1 = 1.700
変形余裕量 t_1 = 0.000, 吹付厚 t_2 = 0.100

$r_3 = R_3 + t_0 + t_1 = 8.680 + 0.300 + 0.000 = 8.980$

$\alpha_1' = \sin^{-1} \dfrac{h_1}{r_3} = \sin^{-1} \dfrac{1.700}{8.980} = 10.^{\circ}9124946$

$Fb = 2\pi \times r_3 \times \alpha_1' / 360^{\circ} \times 2$

$= 2\pi \times 8.980 \times 10.^{\circ}9124946 / 360^{\circ} \times 2 = 3.420643$

$= \underline{3.421\ m^2/m}$

3） コンクリート

（1） 設計断面

a．覆工コンクリート

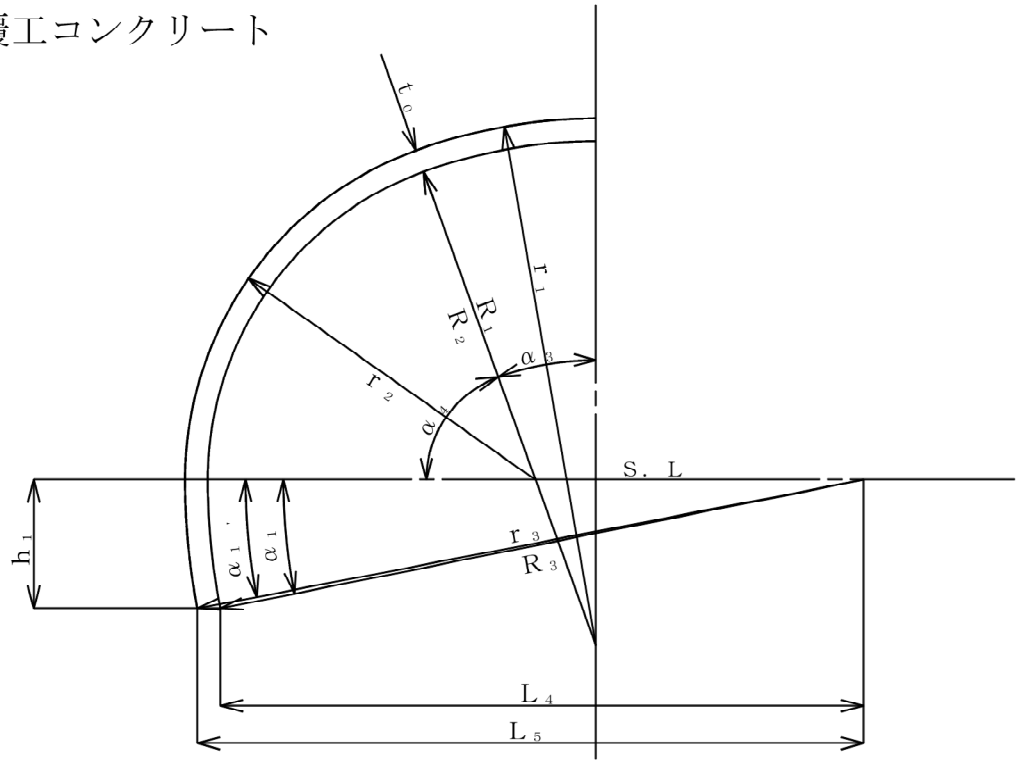

$R_1 = 6.670$, $R_2 = 4.340$, $R_3 = 8.680$

覆工厚 $t_0 = 0.300$, $h_1 = 1.700$

$\alpha_3 = 20.^\circ 0000000$, $\alpha_4 = 70.^\circ 0000000$

$r_1 = R_1 + t_0 = 6.670 + 0.300 = 6.970$

$r_2 = R_2 + t_0 = 4.340 + 0.300 = 4.640$

$r_3 = R_3 + t_0 = 8.680 + 0.300 = 8.980$

$L_4 = \sqrt{R_3^2 - h_1^2} = \sqrt{8.680^2 - 1.700^2} = 8.511898$

$L_5 = \sqrt{r_3^2 - h_1^2} = \sqrt{8.980^2 - 1.700^2} = 8.817619$

$\alpha_1 = \sin^{-1}\dfrac{h_1}{R_3} = \sin^{-1}\dfrac{1.700}{8.680} = 11.^\circ 2945306$

$\alpha_1' = \sin^{1}\dfrac{h_1}{r_3} = \sin^{1}\dfrac{1.700}{8.980} = 10.^\circ 9124946$

アーチ部

$\upsilon_1 = \pi \times (r_1^2 - R_1^2) \times \alpha_3 / 360^\circ \times 2$

$= \pi \times (6.970^2 - 6.670^2) \times 20.^\circ 0000000 / 360^\circ \times 2 = 1.428377$

$\upsilon_2 = \pi \times (r_2^2 - R_2^2) \times \alpha_4 / 360^\circ \times 2$

$= \pi \times (4.640^2 - 4.340^2) \times 70.^\circ 0000000 / 360^\circ \times 2 = 3.291342$

$V_1 = \upsilon_1 + \upsilon_2 = 1.428377 + 3.291342 = 4.719719$

側壁部

$\upsilon_1 = \pi \times r_3^2 \times \alpha_1' / 360^\circ$

$= \pi \times 8.980^2 \times 10.^\circ 9124946 / 360^\circ = 7.679343$

$\upsilon_2 = 1/2 \times h_1 \times L_5 = 1/2 \times 1.700 \times 8.817619 = 7.494976$

$\upsilon_3 = \pi \times R_3^2 \times \alpha_1 / 360^\circ$

$= \pi \times 8.680^2 \times 11.^\circ 2945306 / 360^\circ = 7.426001$

$\upsilon_4 = 1/2 \times h_1 \times L_4 = 1/2 \times 1.700 \times 8.511898 = 7.235113$

$V_2 = \upsilon_1 + \upsilon_2 - (\upsilon_3 + \upsilon_4)$

$= 7.679343 + 7.494976 - (7.426001 + 7.235113) = 0.513205$

$V_{C1} = V_1 + V_2 \times 2 = 4.719719 + 0.513205 \times 2 = 5.746129$

$= \underline{5.746\ m^3/m}$

（２）　支払断面

ａ．覆工コンクリート

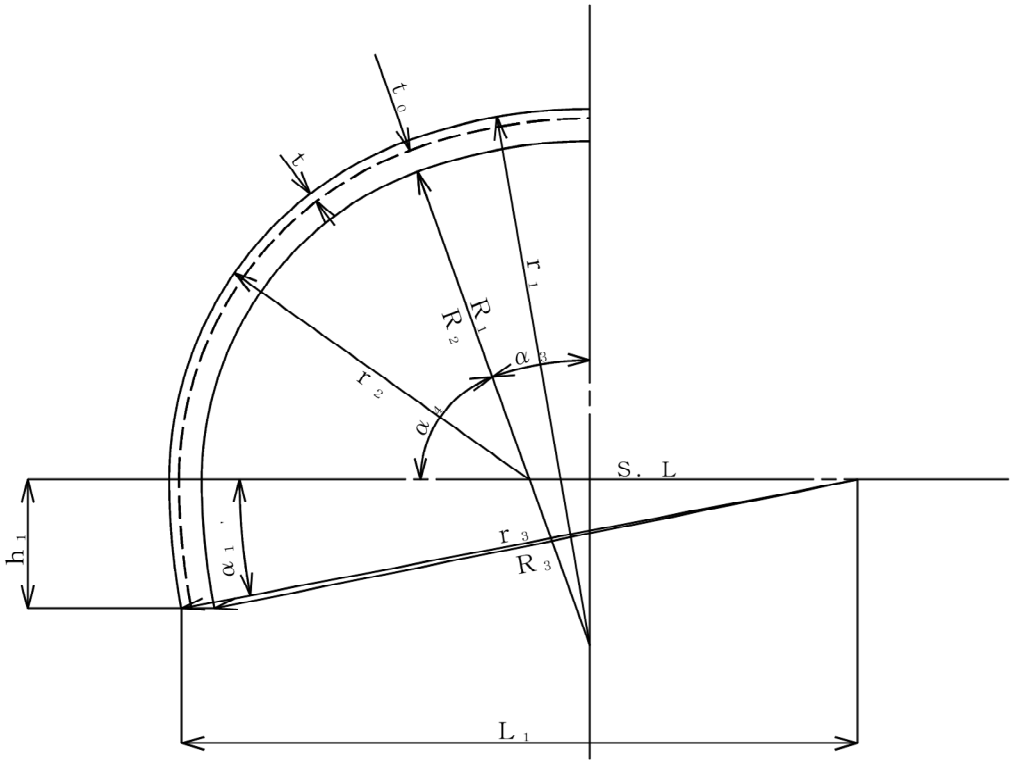

R_1 = 6.670, R_2 = 4.340, R_3 = 8.680

覆工厚 t_0 = 0.300, h_1 = 1.700

余巻 t = 0.130

α_1 = 11°.2945306, α_3 = 20°.0000000, α_4 = 70°.0000000

$r_1 = R_1 + t_0 + t = 6.670 + 0.300 + 0.130 = 7.100$

$r_2 = R_2 + t_0 + t = 4.340 + 0.300 + 0.130 = 4.770$

$r_3 = R_3 + t_0 + t = 8.680 + 0.300 + 0.130 = 9.110$

$L_1 = \sqrt{r_3^2 - h_1^2} = \sqrt{9.110^2 - 1.700^2} = 8.949978$

$\alpha_1' = \sin^{-1}\dfrac{h_1}{r_3} = \sin^{-1}\dfrac{1.700}{9.110} = 10°.7549039$

アーチ部

υ_{S1} = $\pi \times (r_1^2 - R_1^2) \times \alpha_3 / 360^\circ \times 2$

= $\pi \times (7.100^2 - 6.670^2) \times 20.0000000^\circ / 360^\circ \times 2$ = 2.066854

υ_{S2} = $\pi \times (r_2^2 - R_2^2) \times \alpha_4 / 360^\circ \times 2$

= $\pi \times (4.770^2 - 4.340^2) \times 70.0000000^\circ / 360^\circ \times 2$ = 4.785885

V_{S1} = $\upsilon_{S1} + \upsilon_{S2}$ = 2.066854 + 4.785885 = 6.852739

側壁部

υ_{S1} = $\pi \times r_3^2 \times \alpha_1' / 360^\circ$

= $\pi \times 9.110^2 \times 10.7549039^\circ / 360^\circ$ = 7.789161

υ_{S2} = $1/2 \times h_1 \times L_1$ = $1/2 \times 1.700 \times 8.949978$ = 7.607481

υ_{S3} = 設計断面，覆工コンクリート側壁部 υ_3 ～ υ_4 の合計 = 14.661114

V_{S2} = $\upsilon_{S1} + \upsilon_{S2} - \upsilon_{S3}$

= 7.789161 + 7.607481 − 14.661114 = 0.735528

V_{CS1} = $V_{S1} + V_{S2} \times 2$ = 6.852739 + 0.735528 × 2 = 8.323795

= 8.324 m^3／m

4） 型 枠

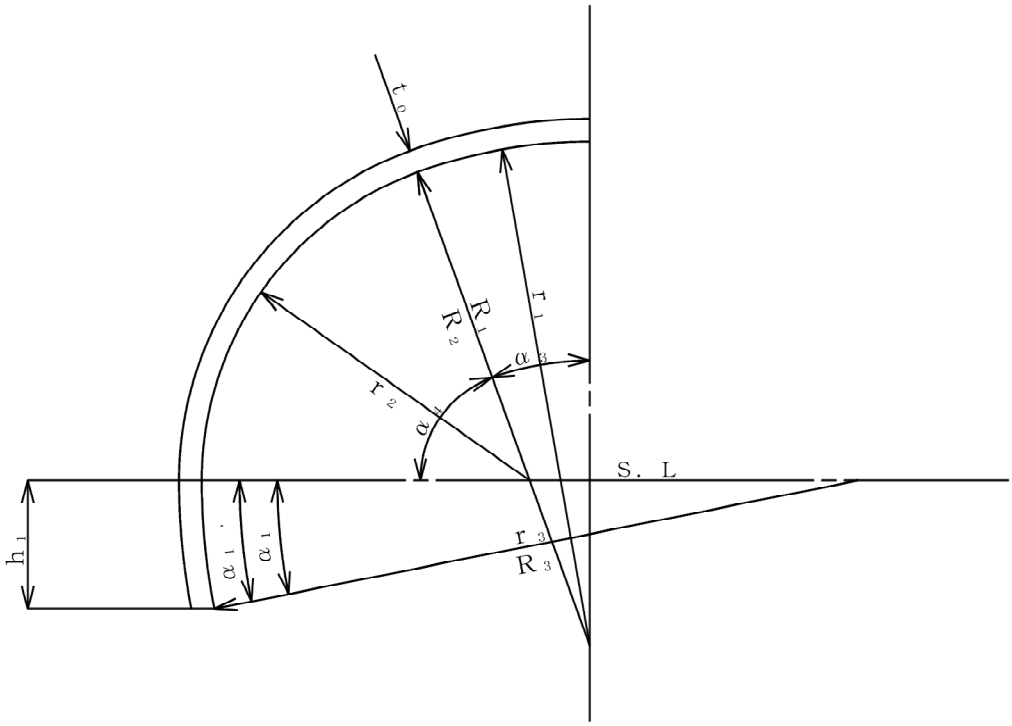

R_1 = 6.670, R_2 = 4.340, R_3 = 8.680

覆工厚 t_0 = 0.300, h_1 = 1.700, 型枠妻板控除 t_1 = 0.000

α_1 = 11°.2945306, α_3 = 20°.0000000, α_4 = 70°.0000000

$r_1 = R_1 + (t_1 / 2) = 6.670 + (0.000 / 2) = 6.670$

$r_2 = R_2 + (t_1 / 2) = 4.340 + (0.000 / 2) = 4.340$

$r_3 = R_3 + (t_1 / 2) = 8.680 + (0.000 / 2) = 8.680$

$\alpha_1' = \mathrm{Sin}^{-1} \dfrac{h_1}{r_3} = \mathrm{Sin}^{-1} \dfrac{1.700}{8.680} = 11°.2945306$

V_{C1} = 設計断面の覆工コンクリートより = 5.746129

V_{CS1} = 支払断面の覆工コンクリートより = 8.323795

＜全巻＞

内面 $= (2\pi \times R_1 \times \alpha_3 / 360^\circ + 2\pi \times R_2 \times \alpha_4 / 360^\circ$
$+ 2\pi \times R_3 \times \alpha_1 / 360^\circ) \times 2$

$= (2\pi \times 6.670 \times 20.^\circ 0000000 / 360^\circ$
$+ 2\pi \times 4.340 \times 70.^\circ 0000000 / 360^\circ$
$+ 2\pi \times 8.680 \times 11.^\circ 2945306 / 360^\circ) \times 2 = 18.683279$
$= \underline{18.683\ m^2/m}$

妻板 $= V_{C1} - (2\pi \times r_1 \times \alpha_3 / 360^\circ + 2\pi \times r_2 \times \alpha_4 / 360^\circ$
(設計) $+ 2\pi \times r_3 \times \alpha_1' / 360^\circ) \times t_1 \times 2$

$= 5.746129 - (2\pi \times 6.670 \times 20.^\circ 0000000 / 360^\circ$
$+ 2\pi \times 4.340 \times 70.^\circ 0000000 / 360^\circ$
$+ 2\pi \times 8.680 \times 11.^\circ 2945306 / 360^\circ) \times 0.000 \times 2 = 5.746129$
$= \underline{5.746\ m^2/ヶ所}$

妻板 $= V_{CS1} - (2\pi \times r_1 \times \alpha_3 / 360^\circ + 2\pi \times r_2 \times \alpha_4 / 360^\circ$
(支払) $+ 2\pi \times r_3 \times \alpha_1' / 360^\circ) \times t_1 \times 2$

$= 8.323795 - (2\pi \times 6.670 \times 20.^\circ 0000000 / 360^\circ$
$+ 2\pi \times 4.340 \times 70.^\circ 0000000 / 360^\circ$
$+ 2\pi \times 8.680 \times 11.^\circ 2945306 / 360^\circ) \times 0.000 \times 2 = 8.323795$
$= \underline{8.324\ m^2/ヶ所}$

ＤＩ－ｂ　　断面

標 準 断 面

爆破掘削

ＤＩ－ｂ　　断面

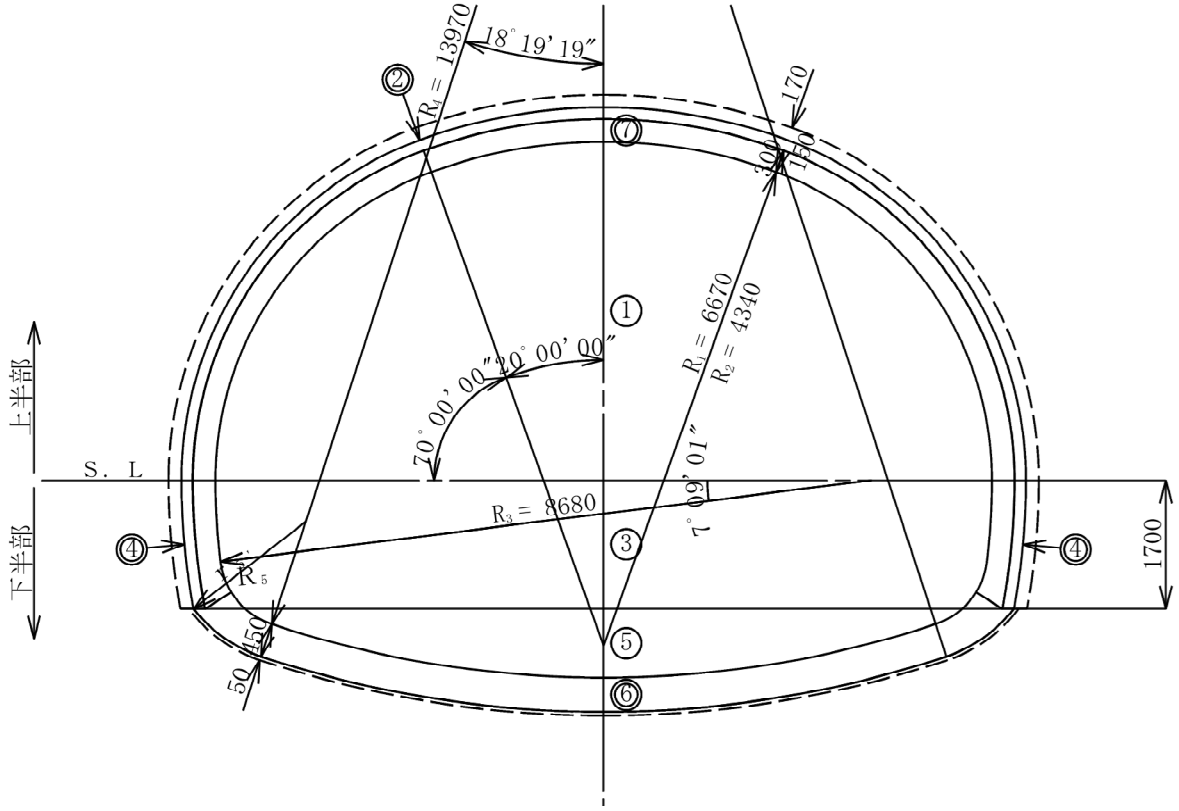

名　　称		掘　削　（m³/m）		吹　付　け コンクリート （m²/m）	コンクリート（m³/m）	
		設　計	支　払		設　計	支　払
①	上部半断面	43.982	46.862			
②	上半吹付けコンクリート			16.204		
③	下部半断面	18.815	19.396			
④	下半吹付けコンクリート			3.421		
⑤	盤下げ	10.860	11.437			
⑥	インバートコンクリート				4.916	5.492
⑦	覆工コンクリート				5.719	7.698
合　　計		73.657	77.695	19.625	10.635	13.190

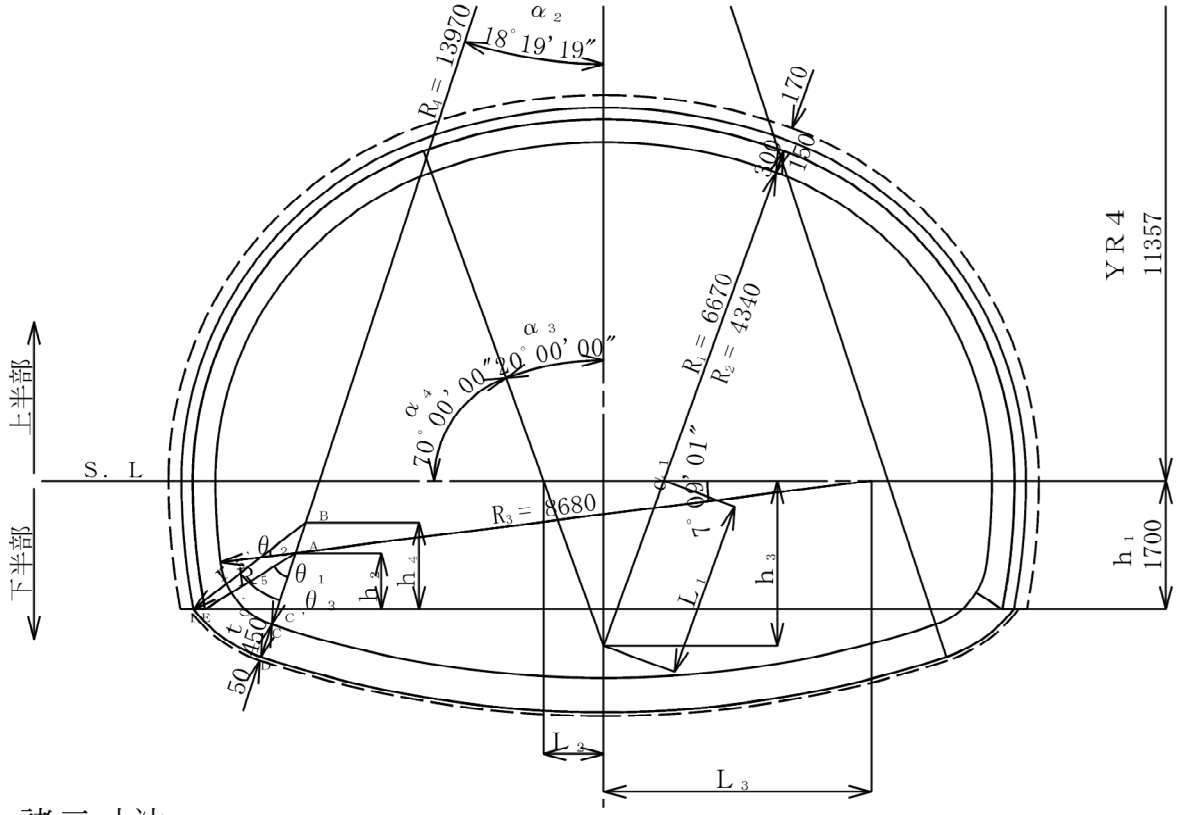

諸元寸法

R_1 = 6.670, R_2 = 4.340, R_3 = 8.680, R_4 =13.97000, R_5 = 1.000

r_5' = 1.878737

覆工厚 t_0 = 0.300, t_0'= 0.450, 吹付厚 t_2 = 0.150

α_1 = 7°.1503334, α_2 = 18°.3218569, α_3 = 20°.0000000, α_4 = 70°.0000000

h_1 = 1.700, 余掘 t = 0.170

r_3 = R_3 + t_0 = 8.680 + 0.300 = 8.980

r_4 = R_4 + t_0'= 13.97000 + 0.450 = 14.42000

L_1 = R_1 − R_2 = 6.670 − 4.340 = 2.330

L_2 = L_1 × Sin α_3 = 2.330 × Sin 20°.0000000 = 0.796907

L_3 = (R_3 − R_2) − L_2 = (8.680 − 4.340) − 0.796907 = 3.543093

$Ax = (R_3 - R_5) \times \cos\alpha_1 - L_3$

$= (8.680 - 1.000) \times \cos 7^\circ.1503334 - 3.543093 = 4.077179$

$Ay = (R_3 - R_5) \times \sin\alpha_1$

$= (8.680 - 1.000) \times \sin 7^\circ.1503334 = 0.955954$

$Bx = r_5'$のX座標 $= 3.942404$

$By = r_5'$のY座標 $= 0.548951$

$YR4 = R_4$ のY座標 $= 11.356540$

$Cx = R_4 \times \sin\alpha_2 = 13.97000 \times \sin 18^\circ.3218569 = 4.391534$

$Cy = R_4 \times \cos\alpha_2 - YR4 = 13.97000 \times \cos 18^\circ.3218569 - 11.356540$

$= 1.905260$

$Dx = r_4 \times \sin\alpha_2 = 14.42000 \times \sin 18^\circ.3218569 = 4.532994$

$Dy = r_4 \times \cos\alpha_2 - YR4 = 14.42000 \times \cos 18^\circ.3218569 - 11.356540$

$= 2.332447$

$Ex = \sqrt{r_3^2 - h_1^2} - L_3 = \sqrt{8.980^2 - 1.700^2} - 3.543093 = 5.274526$

$Ey = h_1 = 1.700$

$C'x = (h_1 + YR4) \times \tan\alpha_2$

$= (1.700 + 11.356540) \times \tan 18^\circ.3218569 = 4.323564$

$C'y = h_1 = 1.700$

$h_2 = h_1 - Ay = 1.700 - 0.955954 = 0.744046$

$h_4 = h_1 - By = 1.700 - 0.548951 = 1.151049$

$Fx = Bx + \sqrt{r_5'^2 - h_4^2} = 3.942404 + \sqrt{1.878737^2 - 1.151049^2}$

$= 5.427240$

$$\theta_1 = \tan^{-1}\frac{Ex - Ax}{h_2} - \alpha_2 = \tan^{-1}\frac{5.274526 - 4.077179}{0.744046}$$

$- 18^\circ.3218569 = 39^\circ.8208221$

$\theta_2 = 90^\circ - (\alpha_1 + \alpha_2 + \theta_1)$

$= 90^\circ - (7^\circ.1503334 + 18^\circ.3218569 + 39^\circ.8208221) = 24^\circ.7069876$

$$\theta_3 = \cos^{-1}\frac{h_4}{r_5'} - \alpha_2 = \cos^{-1}\frac{1.151049}{1.878737} - 18^\circ.3218569 = 33^\circ.8952068$$

$h_3 = (R_1 - R_2) \times \cos\alpha_3$

$= (6.670 - 4.340) \times \cos 20^\circ.0000000 = 2.189484$

1） 掘 削

（1） 設計断面

a． 上部半断面

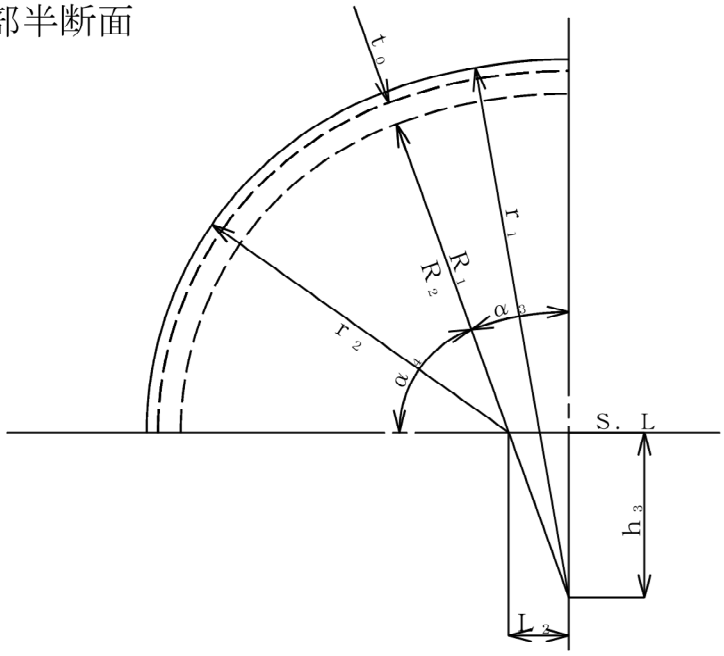

R_1 = 6.670, R_2 = 4.340, 覆工厚 t_0 = 0.300
変形余裕量 t_1 = 0.000, 吹付厚 t_2 = 0.150
α_3 = 20°.0000000, α_4 = 70°.0000000
諸元寸法より　　L_2 = 0.796907, h_3 = 2.189484

$r_1 = R_1 + t_0 + t_1 + t_2$
$= 6.670 + 0.300 + 0.000 + 0.150 = 7.120$
$r_2 = R_2 + t_0 + t_1 + t_2$
$= 4.340 + 0.300 + 0.000 + 0.150 = 4.790$

$Va\text{-}1 = (\pi \times r_1^2 \times \alpha_3 / 360° - 1/2 \times L_2 \times h_3) \times 2$
$= (\pi \times 7.120^2 \times 20°.0000000 / 360° - 1/2 \times 0.796907 \times 2.189484) \times 2 = 15.950869$
$Va\text{-}2 = \pi \times r_2^2 \times \alpha_4 / 360° \times 2$
$= \pi \times 4.790^2 \times 70°.0000000 / 360° \times 2 = 28.031506$

$Va = Va\text{-}1 + Va\text{-}2 = 15.950869 + 28.031506 = 43.982375$
$= 43.982\ m^3/m$

b． 下部半断面

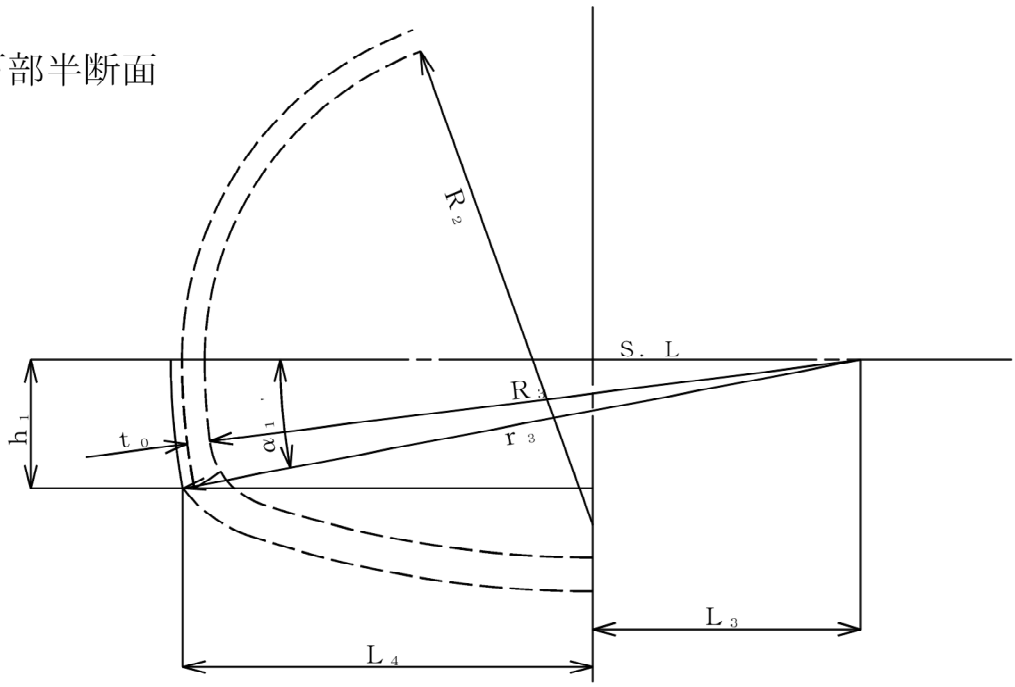

R_2 = 4.340, R_3 = 8.680, 覆工厚 t_0 = 0.300, h_1 = 1.700
変形余裕量 t_1 = 0.000, 吹付厚 t_2 = 0.150
諸元寸法より　　L_3 = 3.543093

$r_3 = R_3 + t_0 + t_1 + t_2$
$= 8.680 + 0.300 + 0.000 + 0.150 = 9.130$

$L_4 = \sqrt{r_3^2 - h_1^2} - L_3 = \sqrt{9.130^2 - 1.700^2} - 3.543093 = 5.427241$

$\alpha_1' = \sin^{-1}\dfrac{h_1}{r_3} = \sin^{-1}\dfrac{1.700}{9.130} = 10.^{\circ}7310647$

$Vb\text{-}1 = \pi \times r_3^2 \times \alpha_1' / 360^{\circ} - 1/2 \times (L_3 + L_4) \times h_1$
$= \pi \times 9.130^2 \times 10.^{\circ}7310647 / 360^{\circ}$
$- 1/2 \times (3.543093 + 5.427241) \times 1.700 = 0.181273$

$Vb\text{-}2 = L_4 \times h_1 = 5.427241 \times 1.700 = 9.226310$

$Vb = (Vb\text{-}1 + Vb\text{-}2) \times 2$
$= (0.181273 + 9.226310) \times 2 = 18.815166$
$= 18.815\ m^3/m$

c．インバート掘削

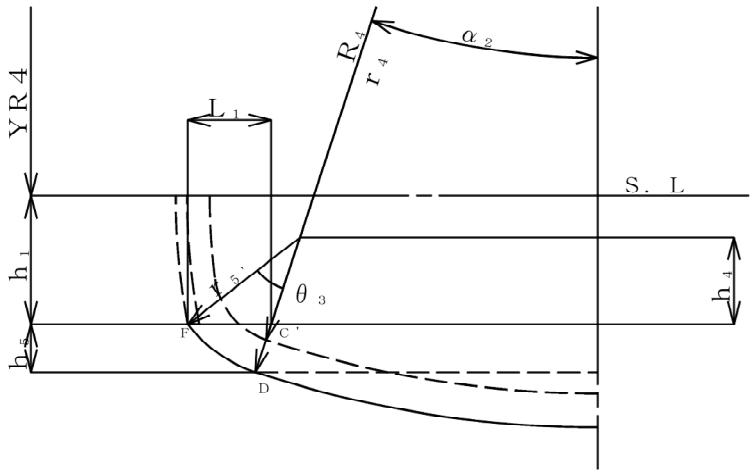

R_4 = 13.97000, r_5' = 1.878737, 覆工厚 t_0' = 0.450, h_1 = 1.700

α_2 = 18°3218569

諸元寸法より　YR4 = 11.356540, Dx = 4.532994, Dy = 2.332447

C'x = 4.323564, Fx = 5.427240

h_4 = 1.151049, θ_3 = 33°8952068

r_4 = R_4 + t_0' = 13.97000 + 0.450 = 14.42000

h_5 = Dy − h_1 = 2.332447 − 1.700 = 0.632447

L_1 = Fx − C'x = 5.427240 − 4.323564 = 1.103676

Vc-1 = (π × $r_5'^2$ × θ_3 / 360° − 1/2 × L_1 × h_4) × 2

= (π × 1.878737^2 × 33°8952068 / 360°

− 1/2 × 1.103676 × 1.151049) × 2 = 0.817697

Vc-2 = 1/2 × (C'x + Dx) × h_5 × 2

= 1/2 × (4.323564 + 4.532994) × 0.632447 × 2 = 5.601304

Vc-3 = { π × r_4^2 × α_2 / 360° − 1/2 × Dx × (YR4 + Dy) } × 2

= { π × 14.42000^2 × 18°3218569 / 360°

− 1/2 × 4.532994 × (11.356540 + 2.332447) } × 2 = 4.441126

Vc = Vc-1 + Vc-2 + Vc-3

= 0.817697 + 5.601304 + 4.441126 = 10.860127

= 10.860 m^3／m

（２）　支払断面

ａ．上部半断面

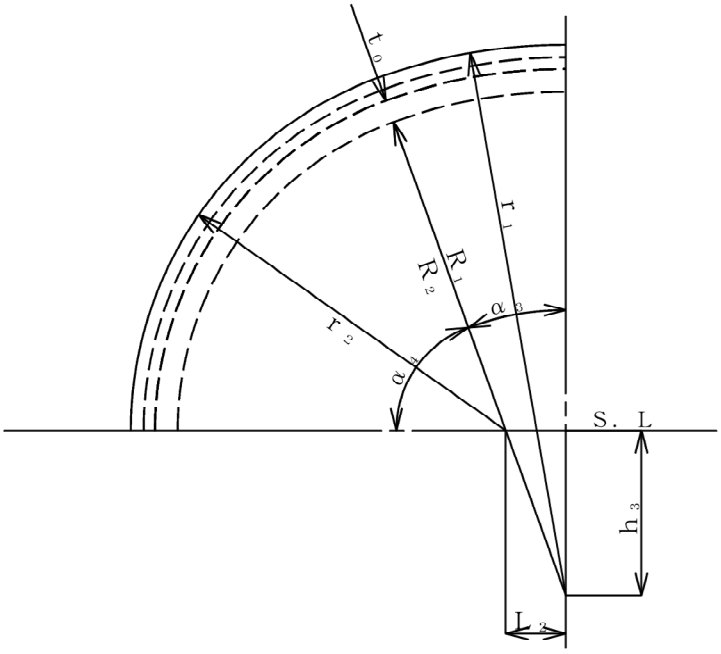

R_1 = 6.670, R_2 = 4.340, 覆工厚 t_0 = 0.300
変形余裕量 t_1 = 0.000, 吹付厚 t_2 = 0.150
余掘 t = 0.170
α_3 = 20°.0000000, α_4 = 70°.0000000
諸元寸法より　　L_2 = 0.796907, h_3 = 2.189484

$r_1 = R_1 + t_0 + t_1 + t_2 + t$
$= 6.670 + 0.300 + 0.000 + 0.150 + 0.170 = 7.290$
$r_2 = R_2 + t_0 + t_1 + t_2 + t$
$= 4.340 + 0.300 + 0.000 + 0.150 + 0.170 = 4.960$

$Vsa\text{-}1 = (\pi \times r_1^2 \times \alpha_3 / 360° - 1/2 \times L_2 \times h_3) \times 2$
$= (\pi \times 7.290^2 \times 20°.0000000 / 360°$
$- 1/2 \times 0.796907 \times 2.189484) \times 2 = 16.805975$
$Vsa\text{-}2 = \pi \times r_2^2 \times \alpha_4 / 360° \times 2$
$= \pi \times 4.960^2 \times 70°.0000000 / 360° \times 2 = 30.056524$

$Vsa = Vsa\text{-}1 + Vsa\text{-}2 = 16.805975 + 30.056524 = 46.862499$
$= 46.862\ m^3/m$

b．下部半断面

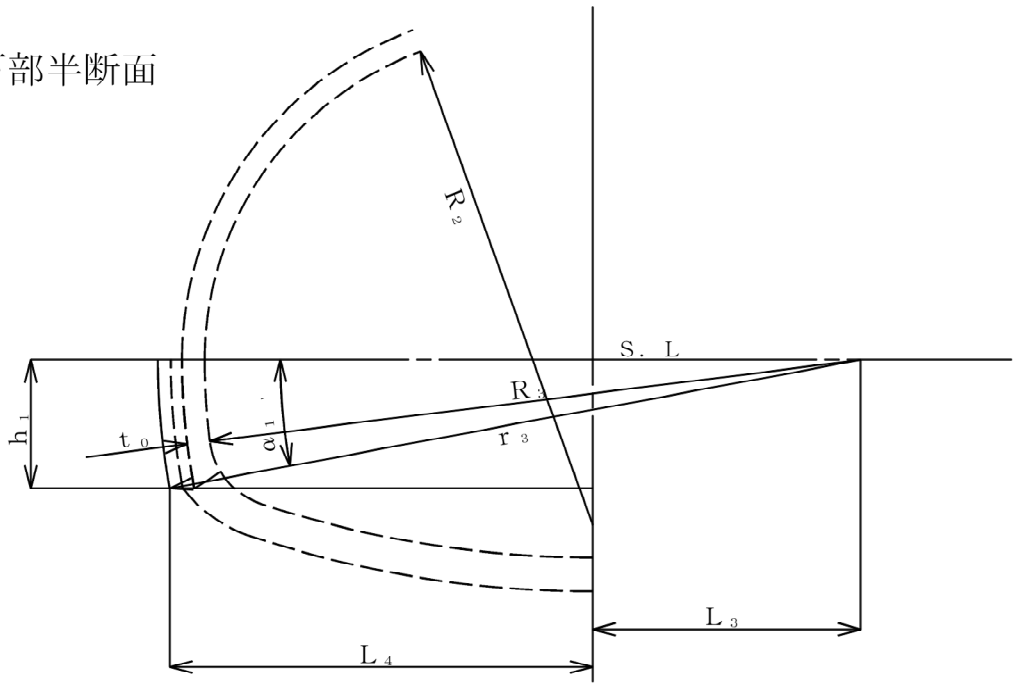

R_2 = 4.340, R_3 = 8.680, 覆工厚 t_0 = 0.300
変形余裕量 t_1 = 0.000, 吹付厚 t_2 = 0.150
余掘 t = 0.170, h_1 = 1.700
諸元寸法より　　L_3 = 3.543093

$$r_3 = R_3 + t_0 + t_1 + t_2 + t$$
$$= 8.680 + 0.300 + 0.000 + 0.150 + 0.170 = 9.300$$

$$L_4 = \sqrt{r_3^2 - h_1^2} - L_3 = \sqrt{9.300^2 - 1.700^2} - 3.543093 = 5.600211$$

$$\alpha_1' = \mathrm{Sin}^{-1}\frac{h_1}{r_3} = \mathrm{Sin}^{-1}\frac{1.700}{9.300} = 10.^{\circ}5326439$$

$$Vsb\text{-}1 = \pi \times r_3^2 \times \alpha_1' / 360^{\circ} - 1/2 \times (L_3 + L_4) \times h_1$$
$$= \pi \times 9.300^2 \times 10.^{\circ}5326439 / 360^{\circ}$$
$$- 1/2 \times (3.543093 + 5.600211) \times 1.700 = 0.177890$$

$$Vsb\text{-}2 = L_4 \times h_1 = 5.600211 \times 1.700 = 9.520359$$

$$Vsb = (Vsb\text{-}1 + Vsb\text{-}2) \times 2$$
$$= (0.177890 + 9.520359) \times 2 = 19.396498$$
$$= 19.396\ m^3/m$$

c．インバート掘削

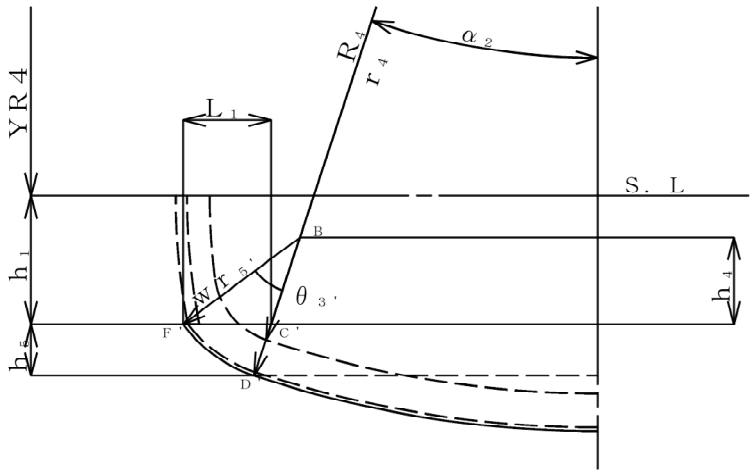

R_4 = 13.97000, r_5'= 1.878737, 覆工厚 t_0'= 0.450, 余掘 t = 0.050

h_1 = 1.700, α_2 = 18°3218569

諸元寸法より　YR4 = 11.356540, Bx = 3.942404, C'x = 4.323564

h_4 = 1.151049

$r_4 = R_4 + t_0' + t = 13.97000 + 0.450 + 0.050 = 14.47000$

$wr_5' = r_5' + t = 1.878737 + 0.050 = 1.928737$

$$\theta_3' = \mathrm{Cos}^{-1}\frac{h_4}{wr_5'} - \alpha_2 = \mathrm{Cos}^{-1}\frac{1.151049}{1.928737} - 18^\circ 3218569 = 35^\circ 0378728$$

$D'x = r_4 \times \mathrm{Sin}\ \alpha_2 = 14.47000 \times \mathrm{Sin}\ 18^\circ 3218569 = 4.548711$

$D'y = r_4 \times \mathrm{Cos}\ \alpha_2 - YR4$

$= 14.47000 \times \mathrm{Cos}\ 18^\circ 3218569 - 11.356540 = 2.379912$

$F'x = Bx + wr_5' \times \mathrm{Sin}(\theta_3' + \alpha_2)$

$= 3.942404 + 1.928737 \times \mathrm{Sin}(35^\circ 0378728 + 18^\circ 3218569) = 5.490019$

$h_5 = D'y - h_1 = 2.379912 - 1.700 = 0.679912$

$L_1 = F'x - C'x = 5.490019 - 4.323564 = 1.166455$

$Vsc\text{-}1 = (\pi \times wr_5'^2 \times \theta_3' / 360^\circ - 1/2 \times L_1 \times h_4) \times 2$

$= (\pi \times 1.928737^2 \times 35^\circ 0378728 / 360^\circ - 1/2 \times 1.166455 \times 1.151049) \times 2 = 0.932247$

$Vsc\text{-}2 = 1/2 \times (C'x + D'x) \times h_5 \times 2$

$= 1/2 \times (4.323564 + 4.548711) \times 0.679912 \times 2 = 6.032366$

$Vsc\text{-}3 = \{\pi \times r_4^2 \times \alpha_2 / 360^\circ - 1/2 \times D'x \times (YR4 + D'y)\} \times 2$

$= \{\pi \times 14.47000^2 \times 18^\circ 3218569 / 360^\circ - 1/2 \times 4.548711 \times (11.356540 + 2.379912)\} \times 2 = 4.471989$

$Vsc = Vsc\text{-}1 + Vsc\text{-}2 + Vsc\text{-}3$

$= 0.932247 + 6.032366 + 4.471989 = 11.436602$

$= \underline{11.437\ m^3/m}$

2）　吹付けコンクリート

a．上部半断面

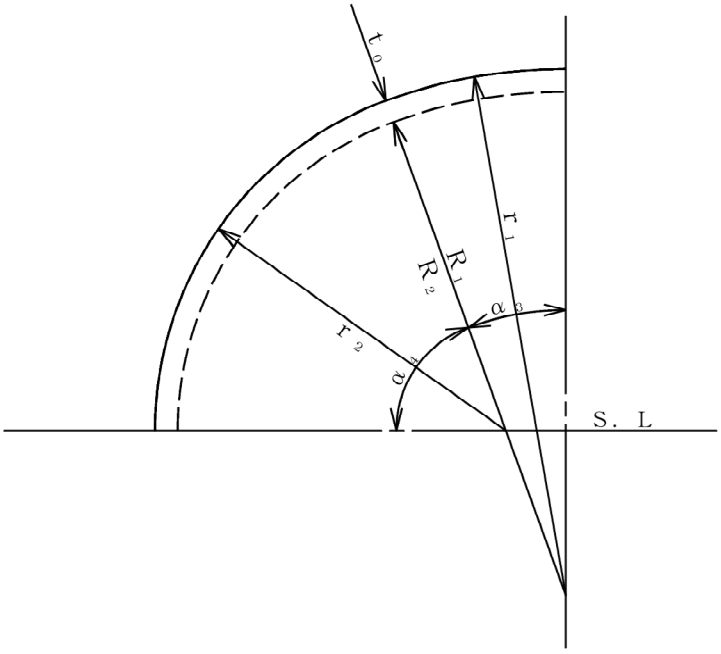

R_1 ＝ 6.670，R_2 ＝ 4.340，覆工厚 t_0 ＝ 0.300
変形余裕量 t_1 ＝ 0.000，吹付厚 t_2 ＝ 0.150
α_3 ＝ 20°.0000000，α_4 ＝ 70°.0000000

$r_1 = R_1 + t_0 + t_1 = 6.670 + 0.300 + 0.000 = 6.970$
$r_2 = R_2 + t_0 + t_1 = 4.340 + 0.300 + 0.000 = 4.640$

$Fa1 = 2\pi \times r_1 \times \alpha_3 / 360° \times 2$
$= 2\pi \times 6.970 \times 20°.0000000 / 360° \times 2 = 4.865978$
$Fa2 = 2\pi \times r_2 \times \alpha_4 / 360° \times 2$
$= 2\pi \times 4.640 \times 70°.0000000 / 360° \times 2 = 11.337659$

$Fa = Fa1 + Fa2 = 4.865978 + 11.337659 = 16.203637$
$= 16.204\ m^2/m$

b． 下部半断面

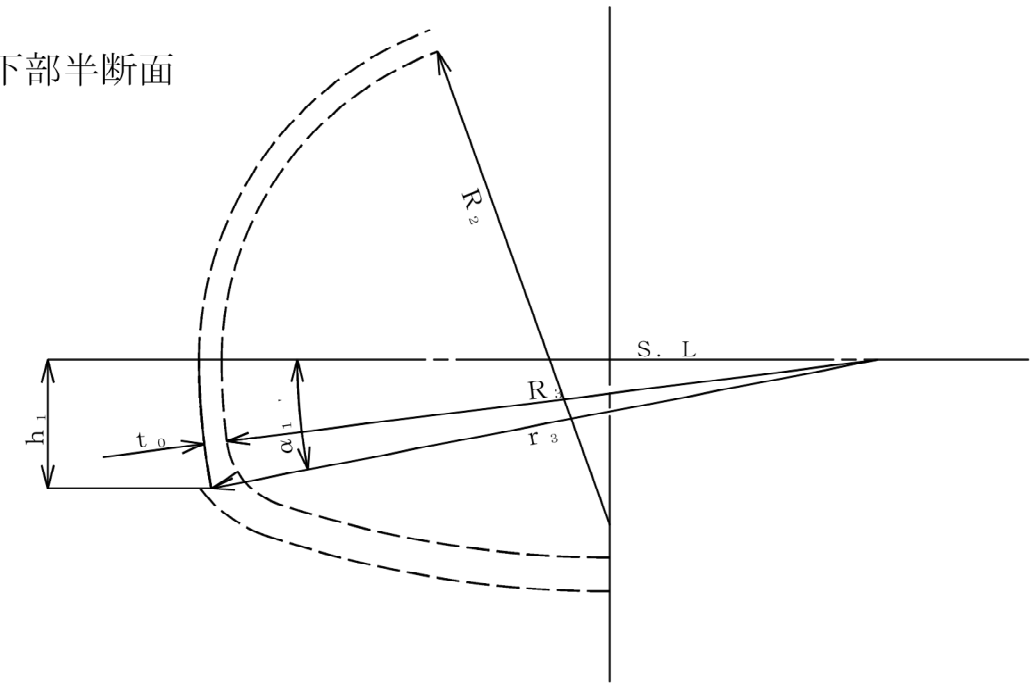

R_2 = 4.340, R_3 = 8.680, 覆工厚 t_0 = 0.300, h_1 = 1.700
変形余裕量 t_1 = 0.000, 吹付厚 t_2 = 0.150

$r_3 = R_3 + t_0 + t_1 = 8.680 + 0.300 + 0.000 = 8.980$

$\alpha_1' = \sin^{-1} \dfrac{h_1}{r_3} = \sin^{-1} \dfrac{1.700}{8.980} = 10.^{\circ}9124946$

$Fb = 2\pi \times r_3 \times \alpha_1' / 360^{\circ} \times 2$

$= 2\pi \times 8.980 \times 10.^{\circ}9124946 / 360^{\circ} \times 2 = 3.420643$

$= 3.421\ m^2/m$

3）　コンクリート

（1）　設計断面

a．覆工コンクリート

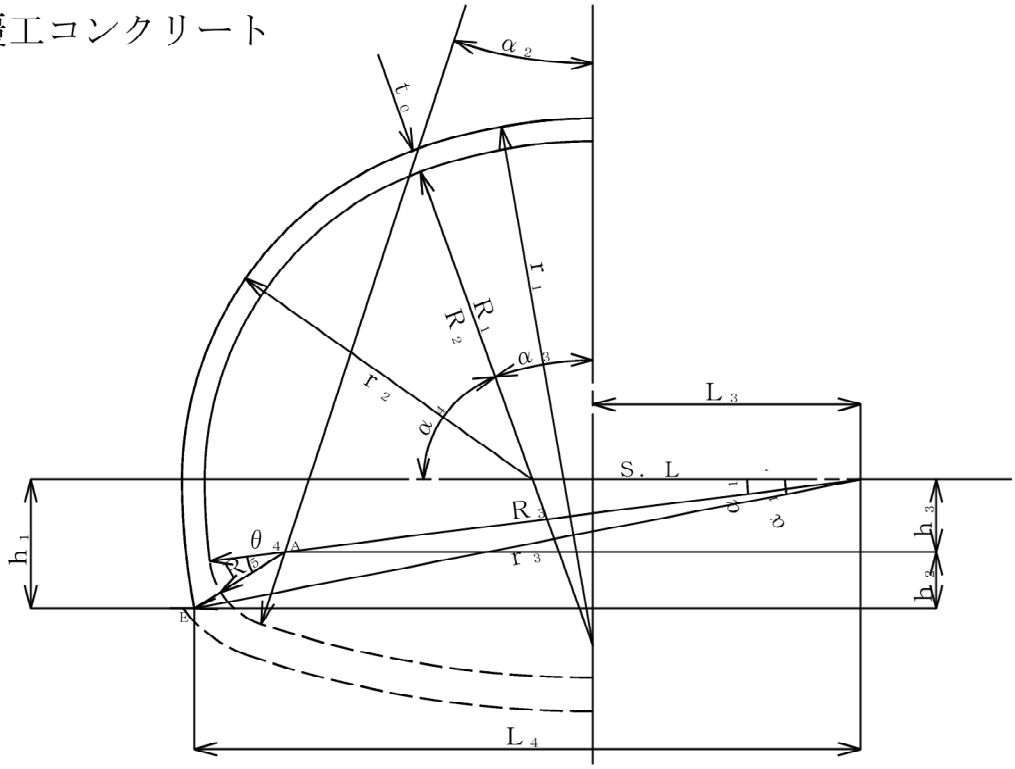

R_1 = 6.670, R_2 = 4.340, R_3 = 8.680, R_5 = 1.000

h_1 = 1.700, 覆工厚 t_0 = 0.300

α_1 = 7°.1503334, α_2 = 18°.3218569, α_3 = 20°.0000000, α_4 = 70°.0000000

諸元寸法より　　Ax = 4.077179, Ay = 0.955954, Ex = 5.274526

L_3 = 3.543093, h_2 = 0.744046, θ_2 = 24°.7069876

$r_1 = R_1 + t_0 = 6.670 + 0.300 = 6.970$

$r_2 = R_2 + t_0 = 4.340 + 0.300 = 4.640$

$r_3 = R_3 + t_0 = 8.680 + 0.300 = 8.980$

$h_3 = Ay = 0.955954$

$\alpha_1' = \sin^{-1}\dfrac{h_1}{r_3} = \sin^{-1}\dfrac{1.700}{8.980} = 10°.9124946$

$\theta_4 = \theta_2 = 24°.7069876$

$L_4 = r_3 \times \cos\alpha_1' = 8.980 \times \cos 10°.9124946 = 8.817619$

アーチ部

$\upsilon_1 = \pi \times (r_1^2 - R_1^2) \times \alpha_3 / 360^\circ \times 2$

$= \pi \times (6.970^2 - 6.670^2) \times 20.0000000^\circ / 360^\circ \times 2 = 1.428377$

$\upsilon_2 = \pi \times (r_2^2 - R_2^2) \times \alpha_4 / 360^\circ \times 2$

$= \pi \times (4.640^2 - 4.340^2) \times 70.0000000^\circ / 360^\circ \times 2 = 3.291342$

$V_1 = \upsilon_1 + \upsilon_2 = 1.428377 + 3.291342 = 4.719719$

側壁部

$\upsilon_1 = \pi \times r_3^2 \times \alpha_1' / 360^\circ$

$= \pi \times 8.980^2 \times 10.9124946^\circ / 360^\circ = 7.679343$

$\upsilon_2 = 1/2 \times h_1 \times L_4$

$= 1/2 \times 1.700 \times 8.817619 = 7.494976$

$\upsilon_3 = \pi \times R_3^2 \times \alpha_1 / 360^\circ$

$= \pi \times 8.680^2 \times 7.1503334^\circ / 360^\circ = 4.701247$

$\upsilon_4 = 1/2 \times (Ax + L_3) \times h_3$

$= 1/2 \times (4.077179 + 3.543093) \times 0.955954 = 3.642315$

$\upsilon_5 = 1/2 \times \{(Ax + L_3) + (Ex + L_3)\} \times h_2$

$= 1/2 \times \{(4.077179 + 3.543093) + (5.274526 + 3.543093)\} \times 0.744046$

$= 6.115274$

$\upsilon_6 = \pi \times R_5^2 \times \theta_4 / 360^\circ$

$= \pi \times 1.000^2 \times 24.7069876^\circ / 360^\circ = 0.215609$

$V_2 = \upsilon_1 + \upsilon_2 - (\upsilon_3 + \upsilon_4 + \upsilon_5 + \upsilon_6)$

$= 7.679343 + 7.494976$

$- (4.701247 + 3.642315 + 6.115274 + 0.215609) = 0.499874$

$V_{C1} = V_1 + V_2 \times 2 = 4.719719 + 0.499874 \times 2 = 5.719467$

$= 5.719\ m^3/m$

b．インバートコンクリート

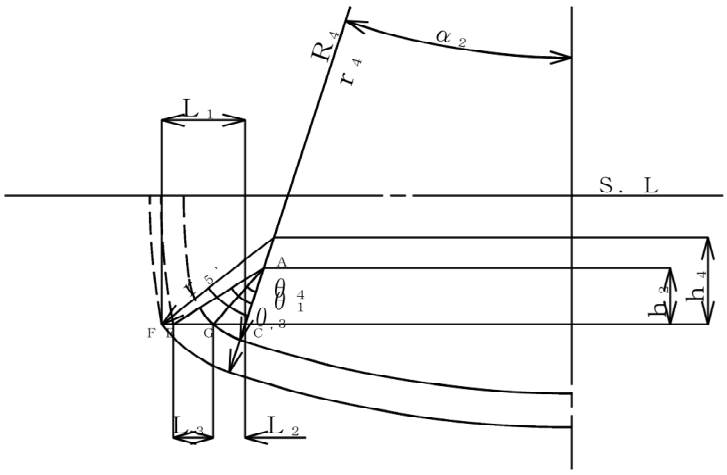

R_4 = 13.97000, R_5 = 1.000, r_5' = 1.878737, 覆工厚 t_0' = 0.450

α_2 = 18°3218569

Ax = 4.077179, C'x = 4.323564, Ex = 5.274526, Fx = 5.427240

h_2 = 0.744046, h_4 = 1.151049, θ_1 = 39°8208221, θ_3 = 33°8952068

$r_4 = R_4 + t_0'$ = 13.97000 + 0.450 = 14.42000

$Gx = Ax + \sqrt{R_5^2 - h_2^2} = 4.077179 + \sqrt{1.000^2 - 0.744046^2} = 4.745307$

$L_1 = Fx - C'x$ = 5.427240 − 4.323564 = 1.103676

$L_2 = Gx - C'x$ = 4.745307 − 4.323564 = 0.421743

$L_3 = Ex - Gx$ = 5.274526 − 4.745307 = 0.529219

$$\theta_4 = \mathrm{Cos}^{-1}\frac{h_2}{R_5} - \alpha_2 = \mathrm{Cos}^{-1}\frac{0.744046}{1.000} - 18°3218569 = 23°6009202$$

$\upsilon_1 = (\pi \times r_5'^2 \times \theta_3 / 360° - 1/2 \times L_1 \times h_4) \times 2$

$= (\pi \times 1.878737^2 \times 33°8952068 / 360° - 1/2 \times 1.103676 \times 1.151049) \times 2 = 0.817697$

$\upsilon_2 = (\pi \times R_5^2 \times \theta_4 / 360° - 1/2 \times L_2 \times h_2) \times 2$

$= (\pi \times 1.000^2 \times 23°6009202 / 360° - 1/2 \times 0.421743 \times 0.744046) \times 2 = 0.098118$

$\upsilon_3 = \{1/2 \times L_3 \times h_2 - \pi \times R_5^2 \times (\theta_1 - \theta_4) / 360°\} \times 2$

$= \{1/2 \times 0.529219 \times 0.744046 - \pi \times 1.000^2 \times (39°8208221 - 23°6009202) / 360°\} \times 2 = 0.110673$

$\upsilon_4 = \{\pi \times (r_4^2 - R_4^2) \times \alpha_2 / 360°\} \times 2$

$= \{\pi \times (14.42000^2 - 13.97000^2) \times 18°3218569 / 360°\} \times 2 = 4.085308$

$V_{C2} = \upsilon_1 - \upsilon_2 + \upsilon_3 + \upsilon_4$

$= 0.817697 - 0.098118 + 0.110673 + 4.085308 = 4.915560$

$= 4.916\ m^3/m$

（２）　支払断面

ａ．覆工コンクリート

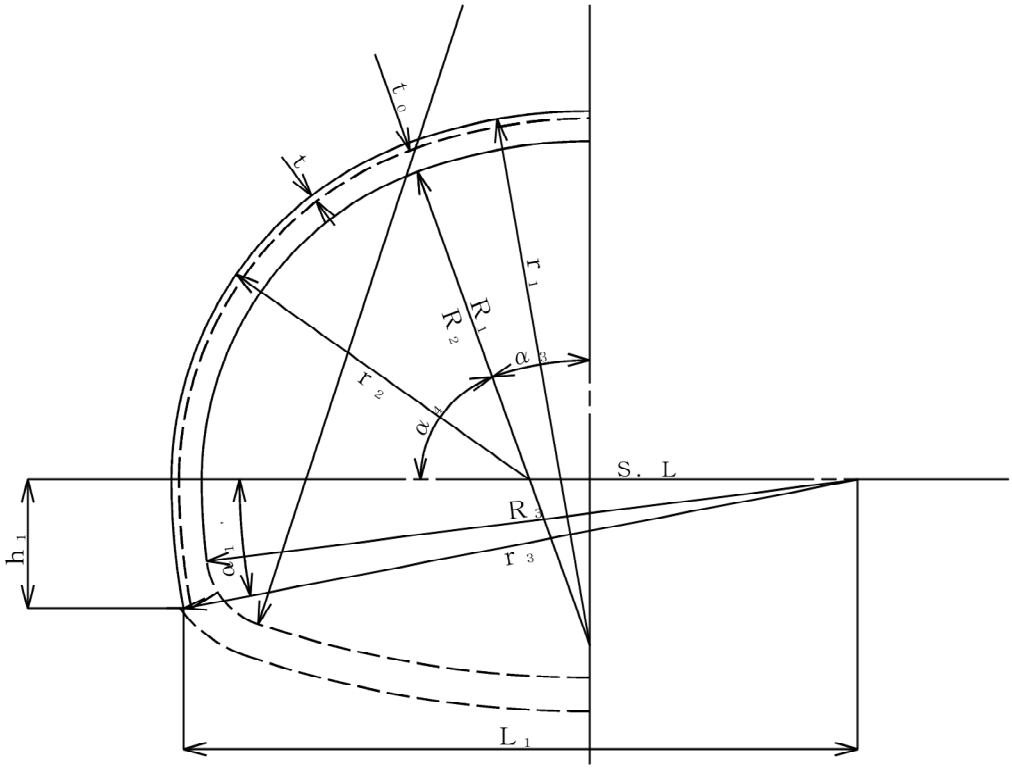

R_1 = 6.670, R_2 = 4.340, R_3 = 8.680

覆工厚 t_0 = 0.300, h_1 = 1.700

余巻 t = 0.100

α_1 = 7°.1503334, α_3 = 20°.0000000, α_4 = 70°.0000000

$r_1 = R_1 + t_0 + t = 6.670 + 0.300 + 0.100 = 7.070$

$r_2 = R_2 + t_0 + t = 4.340 + 0.300 + 0.100 = 4.740$

$r_3 = R_3 + t_0 + t = 8.680 + 0.300 + 0.100 = 9.080$

$\alpha_1' = \mathrm{Sin}^{-1} \dfrac{h_1}{r_3} = \mathrm{Sin}^{-1} \dfrac{1.700}{9.080} = 10°.7908632$

$L_1 = r_3 \times \mathrm{Cos}\ \alpha_1' = 9.080 \times \mathrm{Cos}\ 10°.7908632 = 8.919439$

アーチ部

υ_{S1} $= \pi \times (r_1^2 - R_1^2) \times \alpha_3 / 360^\circ \times 2$

$= \pi \times (7.070^2 - 6.670^2) \times 20.^\circ 0000000 / 360^\circ \times 2 = 1.918466$

υ_{S2} $= \pi \times (r_2^2 - R_2^2) \times \alpha_4 / 360^\circ \times 2$

$= \pi \times (4.740^2 - 4.340^2) \times 70.^\circ 0000000 / 360^\circ \times 2 = 4.437325$

V_{S1} $= \upsilon_{S1} + \upsilon_{S2} = 1.918466 + 4.437325 = 6.355791$

側壁部

υ_{S1} $= \pi \times r_3^2 \times \alpha_1' / 360^\circ$

$= \pi \times 9.080^2 \times 10.^\circ 7908632 / 360^\circ = 7.763816$

υ_{S2} $= 1/2 \times h_1 \times L_1$

$= 1/2 \times 1.700 \times 8.919439 = 7.581523$

υ_{S3} = 設計断面，覆工コンクリート側壁部 υ_3 ～ υ_6 の合計 = 14.674445

V_{S2} $= \upsilon_{S1} + \upsilon_{S2} - \upsilon_{S3}$

$= 7.763816 + 7.581523 - 14.674445 = 0.670894$

V_{CS1} $= V_{S1} + V_{S2} \times 2 = 6.355791 + 0.670894 \times 2 = 7.697579$

$= \underline{7.698\ m^3/m}$

b．インバートコンクリート

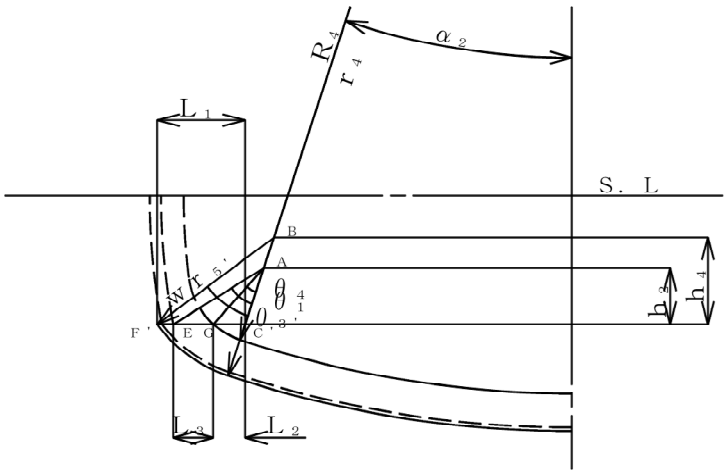

R_4 = 13.97000, R_5 = 1.000, r_5' = 1.878737

覆工厚 t_0' = 0.450, 余巻 t = 0.050, α_2 = 18°3218569

諸元寸法より　h_2 = 0.744046, h_4 = 1.151049, θ_1 = 39°8208221

Ax = 4.077179, Bx = 3.942404, C'x = 4.323564

Ex = 5.274526

$r_4 = R_4 + t_0' + t = 13.97000 + 0.450 + 0.050 = 14.47000$

$wr_5' = r_5' + t = 1.878737 + 0.050 = 1.928737$

$F'x = Bx + \sqrt{wr_5'^2 - h_4^2} = 3.942404 + \sqrt{1.928737^2 - 1.151049^2} = 5.490019$

$Gx = Ax + \sqrt{R_5^2 - h_2^2} = 4.077179 + \sqrt{1.000^2 - 0.744046^2} = 4.745307$

$L_1 = F'x - C'x = 5.490019 - 4.323564 = 1.166455$

$L_2 = Gx - C'x = 4.745307 - 4.323564 = 0.421743$

$L_3 = Ex - Gx = 5.274526 - 4.745307 = 0.529219$

$\theta_3' = \mathrm{Cos}^{-1}\dfrac{h_4}{wr_5'} - \alpha_2 = \mathrm{Cos}^{-1}\dfrac{1.151049}{1.928737} - 18°3218569 = 35°0378728$

$\theta_4 = \mathrm{Cos}^{-1}\dfrac{h_2}{R_5} - \alpha_2 = \mathrm{Cos}^{-1}\dfrac{0.744046}{1.000} - 18°3218569 = 23°6009202$

$$\upsilon_1 = (\pi \times wr_5'^2 \times \theta_3' / 360^\circ - 1/2 \times L_1 \times h_4) \times 2$$
$$= (\pi \times 1.928737^2 \times 35.^\circ 0378728 / 360^\circ - 1/2 \times 1.166455 \times 1.151049) \times 2 = 0.932247$$
$$\upsilon_2 = (\pi \times R_5^2 \times \theta_4 / 360^\circ - 1/2 \times L_2 \times h_2) \times 2$$
$$= (\pi \times 1.000^2 \times 23.^\circ 6009202 / 360^\circ - 1/2 \times 0.421743 \times 0.744046) \times 2 = 0.098118$$
$$\upsilon_3 = \{1/2 \times L_3 \times h_2 - \pi \times R_5^2 \times (\theta_1 - \theta_4) / 360^\circ\} \times 2$$
$$= \{1/2 \times 0.529219 \times 0.744046 - \pi \times 1.000^2 \times (39.^\circ 8208221 - 23.^\circ 6009202) / 360^\circ\} \times 2 = 0.110673$$
$$\upsilon_4 = \pi \times (r_4^2 - R_4^2) \times \alpha_2 / 360^\circ \times 2$$
$$= \pi \times (14.47000^2 - 13.97000^2) \times 18.^\circ 3218569 / 360^\circ \times 2 = 4.547225$$

$$V_{CS2} = \upsilon_1 - \upsilon_2 + \upsilon_3 + \upsilon_4$$
$$= 0.932247 - 0.098118 + 0.110673 + 4.547225 = 5.492027$$
$$= \underline{5.492\ m^3/m}$$

4） 型 枠

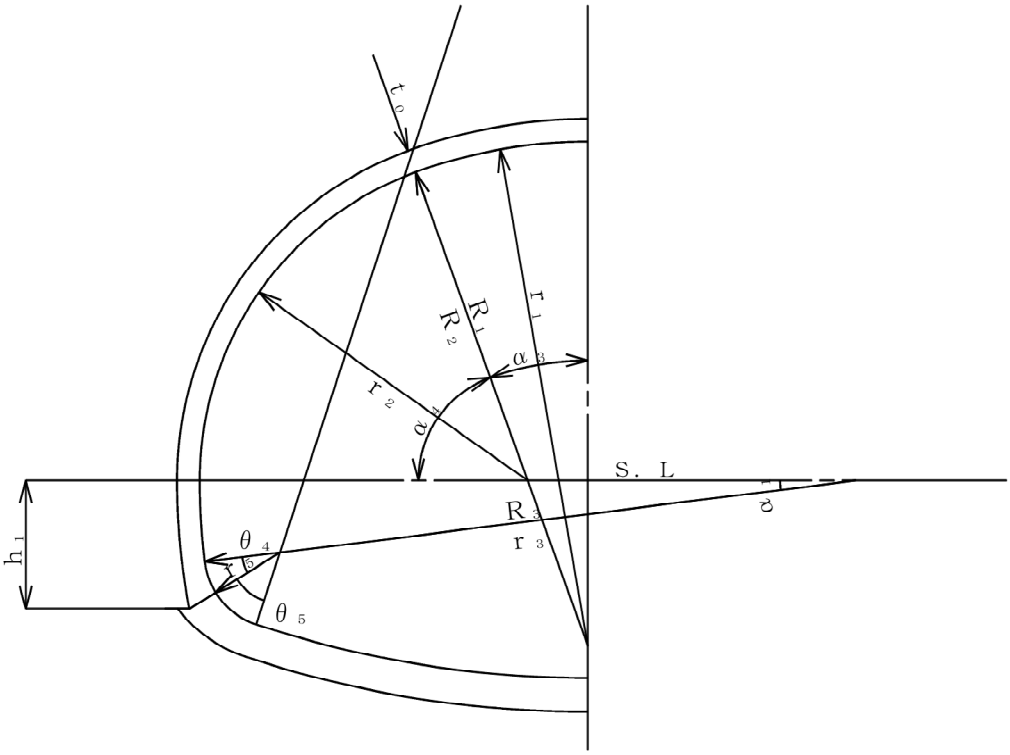

R_1 = 6.670, R_2 = 4.340, R_3 = 8.680, R_5 = 1.000

覆工厚 t_0 = 0.300, h_1 = 1.700, 型枠妻板控除 t_1 = 0.000

α_1 = 7°.1503334, α_3 = 20°.0000000, α_4 = 70°.0000000

θ_4 = 設計断面の覆工コンクリートより = 24°.7069876

θ_5 = 諸元寸法より（θ_1） = 39°.8208221

r_1 = R_1 + (t_1 / 2) = 6.670 + (0.000 / 2) = 6.670

r_2 = R_2 + (t_1 / 2) = 4.340 + (0.000 / 2) = 4.340

r_3 = R_3 + (t_1 / 2) = 8.680 + (0.000 / 2) = 8.680

r_5 = R_5 + (t_1 / 2) = 1.000 + (0.000 / 2) = 1.000

V_{C1} = 設計断面の覆工コンクリートより = 5.719467

V_{CS1} = 支払断面の覆工コンクリートより = 7.697579

V_{C2} = 設計断面のインバートコンクリートより = 4.915560

V_{CS2} = 支払断面のインバートコンクリートより = 5.492027

＜全巻＞

内面 $= (2\pi \times R_1 \times \alpha_3 / 360^\circ + 2\pi \times R_2 \times \alpha_4 / 360^\circ$
$+ 2\pi \times R_3 \times \alpha_1 / 360^\circ + 2\pi \times R_5 \times \theta_4 / 360^\circ) \times 2$
$= (2\pi \times 6.670 \times 20.0000000^\circ / 360^\circ$
$+ 2\pi \times 4.340 \times 70.0000000^\circ / 360^\circ$
$+ 2\pi \times 8.680 \times 7.1503334^\circ / 360^\circ$
$+ 2\pi \times 1.000 \times 24.7069876^\circ / 360^\circ) \times 2 = 18.290069$
$= \underline{18.290\ m^2／m}$

妻板 $= V_{C1} - (2\pi \times r_1 \times \alpha_3 / 360^\circ + 2\pi \times r_2 \times \alpha_4 / 360^\circ$
(設計) $+ 2\pi \times r_3 \times \alpha_1 / 360^\circ + 2\pi \times r_5 \times \theta_4 / 360^\circ) \times t_1 \times 2$
$= 5.719467 - (2\pi \times 6.670 \times 20.0000000^\circ / 360^\circ$
$+ 2\pi \times 4.340 \times 70.0000000^\circ / 360^\circ$
$+ 2\pi \times 8.680 \times 7.1503334^\circ / 360^\circ$
$+ 2\pi \times 1.000 \times 24.7069876^\circ / 360^\circ) \times 0.000 \times 2 = 5.719467$
$= \underline{5.719\ m^2／ヶ所}$

妻板 $= V_{CS1} - (2\pi \times r_1 \times \alpha_3 / 360^\circ + 2\pi \times r_2 \times \alpha_4 / 360^\circ$
(支払) $+ 2\pi \times r_3 \times \alpha_1 / 360^\circ + 2\pi \times r_5 \times \theta_4 / 360^\circ) \times t_1 \times 2$
$= 7.697579 - (2\pi \times 6.670 \times 20.0000000^\circ / 360^\circ$
$+ 2\pi \times 4.340 \times 70.0000000^\circ / 360^\circ$
$+ 2\pi \times 8.680 \times 7.1503334^\circ / 360^\circ$
$+ 2\pi \times 1.000 \times 24.7069876^\circ / 360^\circ) \times 0.000 \times 2 = 7.697579$
$= \underline{7.698\ m^2／ヶ所}$

＜インバート＞

内面 $= 2\pi \times R_5 \times \theta_5 / 360^\circ \times 2$
$= 2\pi \times 1.000 \times 39.8208221^\circ / 360^\circ \times 2 = 1.390009$
$= \underline{1.390\ m^2／m}$

妻板 = 設計断面のインバートコンクリートに同じ $= \underline{4.916\ m^2／ヶ所}$
(設計)

妻板 = 支払断面のインバートコンクリートに同じ $= \underline{5.492\ m^2／ヶ所}$
(支払)

5） 金 網

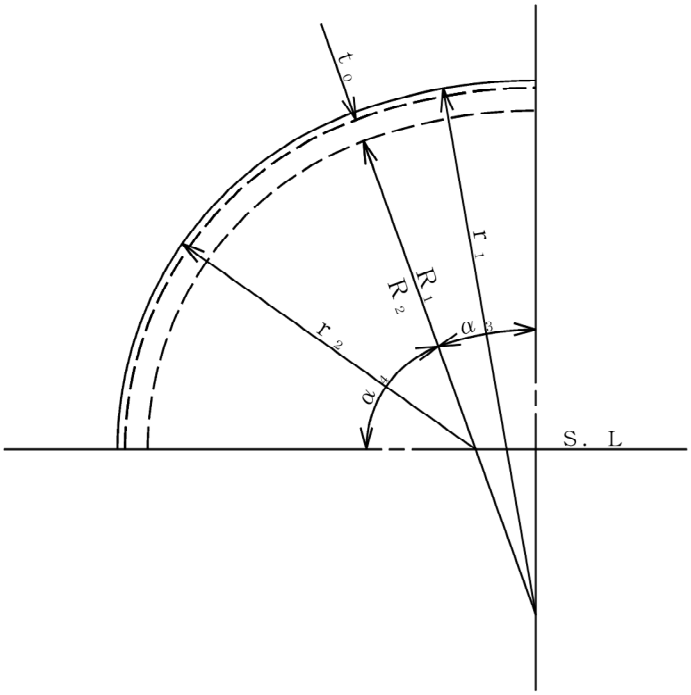

R_1 = 6.670, R_2 = 4.340, 覆工厚 t_0 = 0.300
変形余裕量(上半) t_1 = 0.000, 吹き付け厚(２次) t_3 = 0.100
α_3 = 20°.0000000, α_4 = 70°.0000000

$r_1 = R_1 + t_0 + t_1 + t_3$
$= 6.670 + 0.300 + 0.000 + 0.100 = 7.070$
$r_2 = R_2 + t_0 + t_1 + t_3$
$= 4.340 + 0.300 + 0.000 + 0.100 = 4.740$

上半 $= (2\pi \times r_1 \times \alpha_3 / 360° + 2\pi \times r_2 \times \alpha_4 / 360°) \times 2$
$= (2\pi \times 7.070 \times 20°.0000000 / 360°$
$+ 2\pi \times 4.740 \times 70°.0000000 / 360°) \times 2 = 16.517796$
$= 16.518\ m^2/m$

ＤⅢ－ａ　　断面

標 準 断 面

爆破掘削

ＤⅢ－ａ　　断面

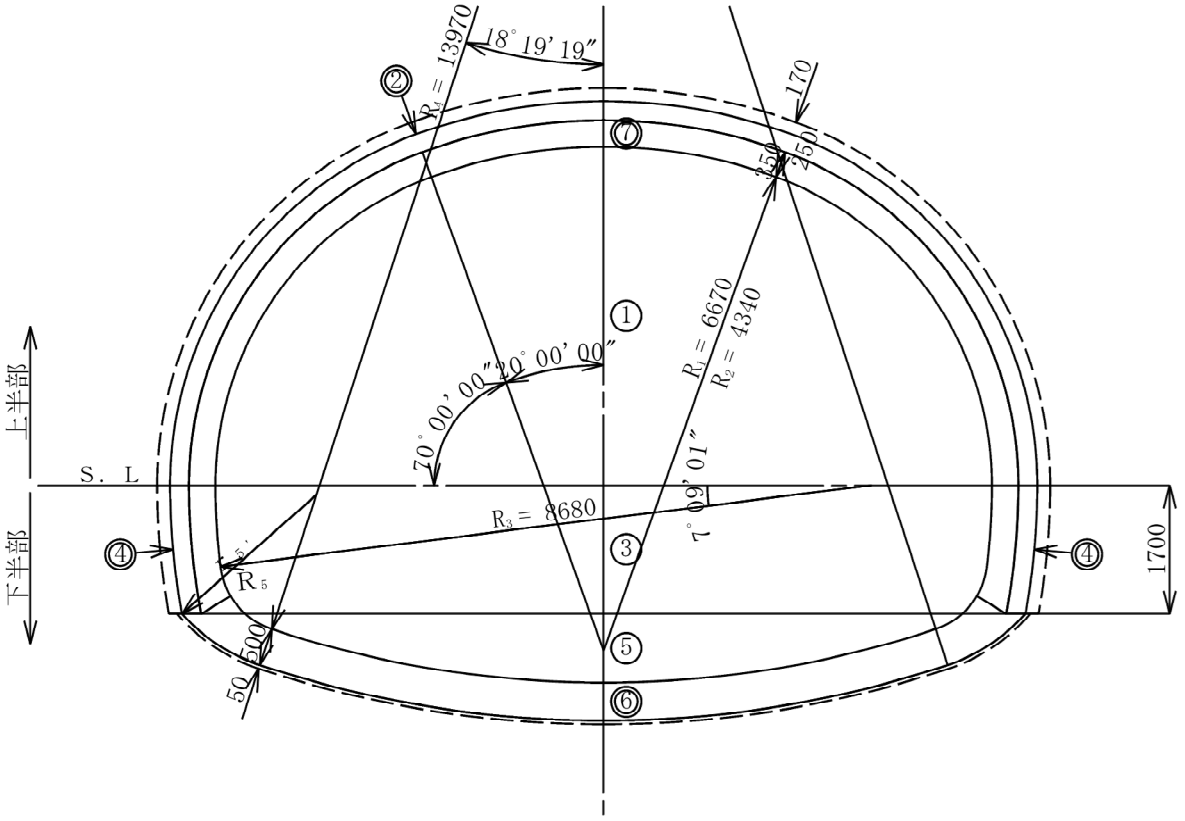

名　　称		掘　削　（m³/m）		吹　付　け コンクリート （m²/m）	コンクリート（m³/m）	
		設　計	支　払		設　計	支　払
①	上部半断面	46.519	49.479			
②	上半吹付けコンクリート			16.361		
③	下部半断面	19.328	19.909			
④	下半吹付けコンクリート			3.420		
⑤	盤下げ	11.494	12.086			
⑥	インバートコンクリート				5.568	6.160
⑦	覆工コンクリート				6.685	8.679
合　　計		77.341	81.474	19.781	12.253	14.839

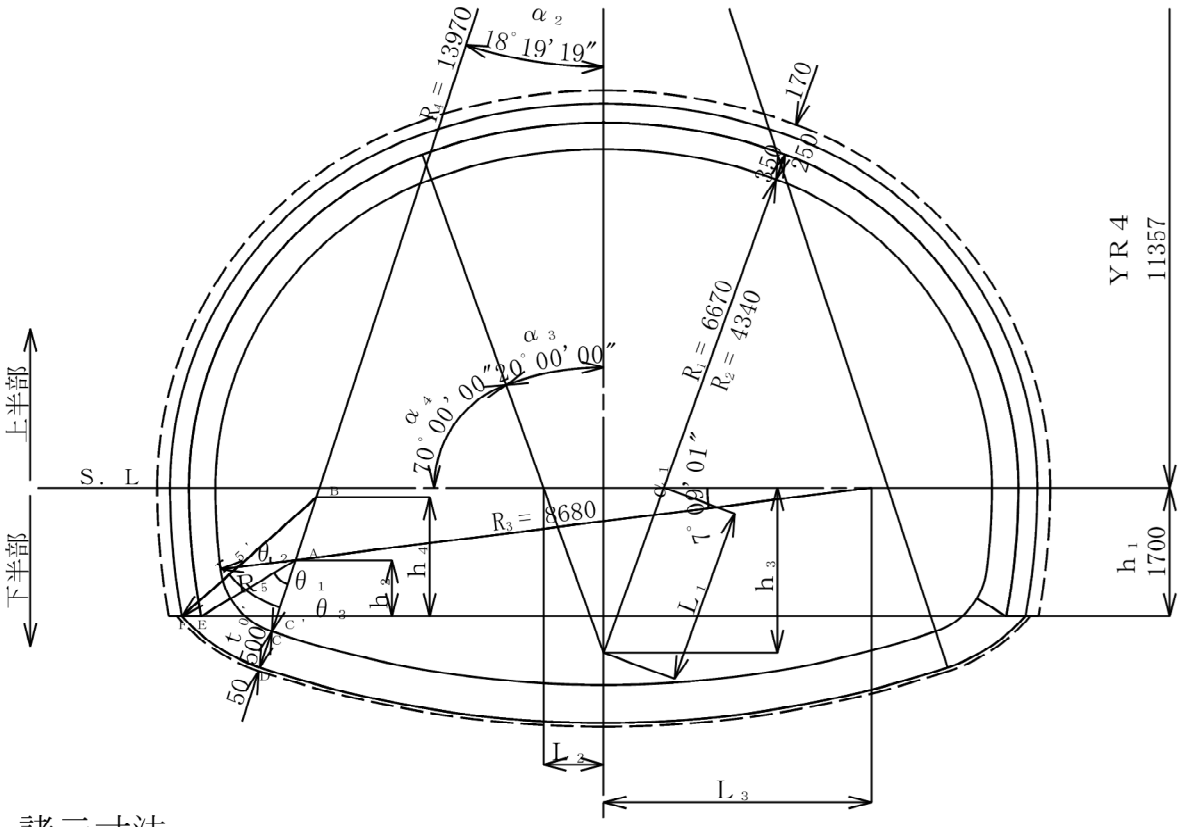

諸元寸法

R_1 = 6.670, R_2 = 4.340, R_3 = 8.680, R_4 =13.97000, R_5 = 1.000

r_5' = 2.374080

覆工厚 t_0 = 0.350, t_0' = 0.500, 吹付厚 t_2 = 0.250

α_1 = 7°.1503334, α_2 = 18°.3218569, α_3 = 20°.0000000, α_4 = 70°.0000000

h_1 = 1.700, 余掘 t = 0.170

r_3 = R_3 + t_0 = 8.680 + 0.350 = 9.030

r_4 = R_4 + t_0' = 13.97000 + 0.500 = 14.47000

L_1 = R_1 − R_2 = 6.670 − 4.340 = 2.330

L_2 = L_1 × Sin α_3 = 2.330 × Sin 20°.0000000 = 0.796907

L_3 = (R_3 − R_2) − L_2 = (8.680 − 4.340) − 0.796907 = 3.543093

$Ax = (R_3 - R_5) \times \cos\alpha_1 - L_3$

$= (8.680 - 1.000) \times \cos 7^\circ.1503334 - 3.543093 = 4.077179$

$Ay = (R_3 - R_5) \times \sin\alpha_1$

$= (8.680 - 1.000) \times \sin 7^\circ.1503334 = 0.955954$

$Bx = r_5'$のX座標 $= 3.802408$

$By = r_5'$のY座標 $= 0.126184$

$YR4 = R_4$ のY座標 $= 11.356540$

$Cx = R_4 \times \sin\alpha_2 = 13.97000 \times \sin 18^\circ.3218569 = 4.391534$

$Cy = R_4 \times \cos\alpha_2 - YR4 = 13.97000 \times \cos 18^\circ.3218569 - 11.356540$

$= 1.905260$

$Dx = r_4 \times \sin\alpha_2 = 14.47000 \times \sin 18^\circ.3218569 = 4.548711$

$Dy = r_4 \times \cos\alpha_2 - YR4 = 14.47000 \times \cos 18^\circ.3218569 - 11.356540$

$= 2.379912$

$Ex = \sqrt{r_3^2 - h_1^2} - L_3 = \sqrt{9.030^2 - 1.700^2} - 3.543093 = 5.325441$

$Ey = h_1 = 1.700$

$C'x = (h_1 + YR4) \times \tan\alpha_2$

$= (1.700 + 11.356540) \times \tan 18^\circ.3218569 = 4.323564$

$C'y = h_1 = 1.700$

$h_2 = h_1 - Ay = 1.700 - 0.955954 = 0.744046$

$h_4 = h_1 - By = 1.700 - 0.126184 = 1.573816$

$Fx = Bx + \sqrt{r_5'^2 - h_4^2} = 3.802408 + \sqrt{2.374080^2 - 1.573816^2}$

$= 5.579867$

$$\theta_1 = \tan^{-1}\frac{Ex - Ax}{h_2} - \alpha_2 = \tan^{-1}\frac{5.325441 - 4.077179}{0.744046}$$

$- 18^\circ.3218569 = 40^\circ.8804289$

$\theta_2 = 90^\circ - (\alpha_1 + \alpha_2 + \theta_1)$

$= 90^\circ - (7^\circ.1503334 + 18^\circ.3218569 + 40^\circ.8804289) = 23^\circ.6473808$

$$\theta_3 = \cos^{-1}\frac{h_4}{r_5'} - \alpha_2 = \cos^{-1}\frac{1.573816}{2.374080} - 18^\circ.3218569 = 30^\circ.1554862$$

$h_3 = (R_1 - R_2) \times \cos\alpha_3$

$= (6.670 - 4.340) \times \cos 20^\circ.0000000 = 2.189484$

1） 掘 削

（1） 設計断面

a． 上部半断面

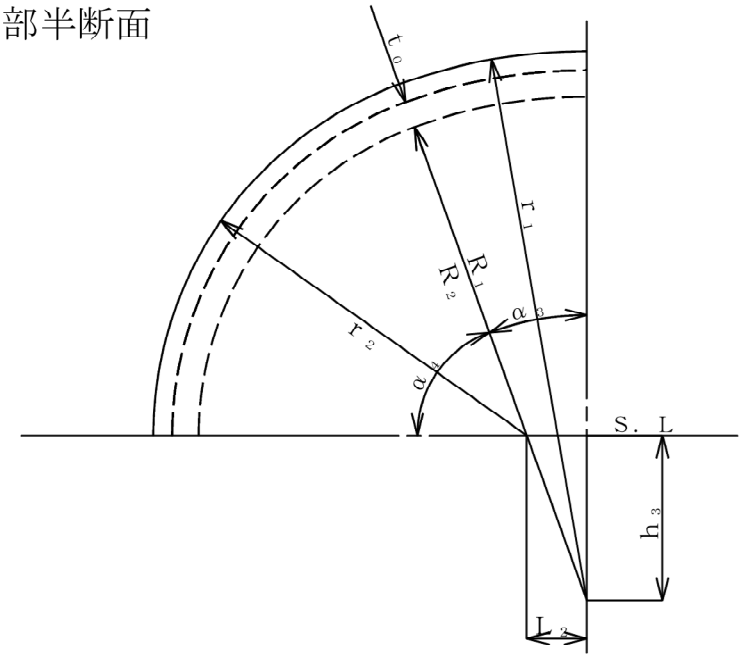

R_1 = 6.670, R_2 = 4.340, 覆工厚 t_0 = 0.350
変形余裕量 t_1 = 0.000, 吹付厚 t_2 = 0.250
α_3 = 20°.0000000, α_4 = 70°.0000000
諸元寸法より　　L_2 = 0.796907, h_3 = 2.189484

$r_1 = R_1 + t_0 + t_1 + t_2$
$= 6.670 + 0.350 + 0.000 + 0.250 = 7.270$
$r_2 = R_2 + t_0 + t_1 + t_2$
$= 4.340 + 0.350 + 0.000 + 0.250 = 4.940$

$Va\text{-}1 = (\pi \times r_1^2 \times \alpha_3 / 360^\circ - 1/2 \times L_2 \times h_3) \times 2$
$= (\pi \times 7.270^2 \times 20^\circ.0000000 / 360^\circ - 1/2 \times 0.796907 \times 2.189484) \times 2 = 16.704327$
$Va\text{-}2 = \pi \times r_2^2 \times \alpha_4 / 360^\circ \times 2$
$= \pi \times 4.940^2 \times 70^\circ.0000000 / 360^\circ \times 2 = 29.814622$

$Va = Va\text{-}1 + Va\text{-}2 = 16.704327 + 29.814622 = 46.518949$
$= 46.519\ m^3/m$

b．下部半断面

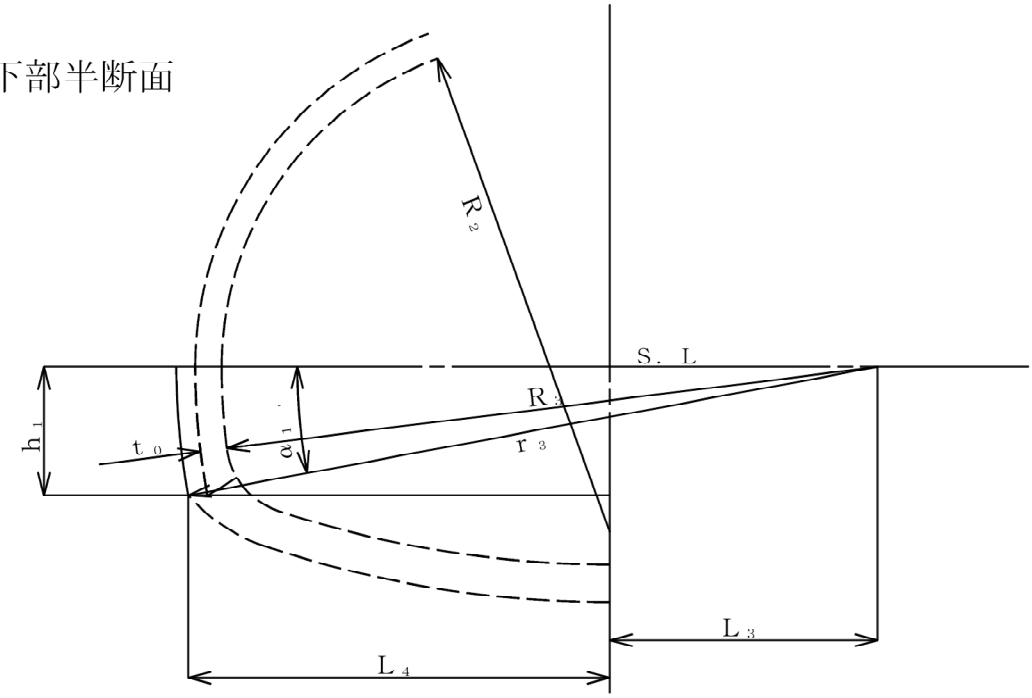

R_2 = 4.340, R_3 = 8.680, 覆工厚 t_0 = 0.350, h_1 = 1.700
変形余裕量 t_1 = 0.000, 吹付厚 t_2 = 0.250
諸元寸法より　　L_3 = 3.543093

$$r_3 = R_3 + t_0 + t_1 + t_2$$
$$= 8.680 + 0.350 + 0.000 + 0.250 = 9.280$$

$$L_4 = \sqrt{r_3^2 - h_1^2} - L_3 = \sqrt{9.280^2 - 1.700^2} - 3.543093 = 5.579867$$

$$\alpha_1' = \sin^{-1}\frac{h_1}{r_3} = \sin^{-1}\frac{1.700}{9.280} = 10.^\circ 5556036$$

$$Vb\text{-}1 = \pi \times r_3^2 \times \alpha_1' / 360^\circ - 1/2 \times (L_3 + L_4) \times h_1$$
$$= \pi \times 9.280^2 \times 10.^\circ 5556036 / 360^\circ - 1/2 \times (3.543093 + 5.579867) \times 1.700 = 0.178282$$

$$Vb\text{-}2 = L_4 \times h_1 = 5.579867 \times 1.700 = 9.485774$$

$$Vb = (Vb\text{-}1 + Vb\text{-}2) \times 2$$
$$= (0.178282 + 9.485774) \times 2 = 19.328112$$
$$= 19.328\ m^3/m$$

c．インバート掘削

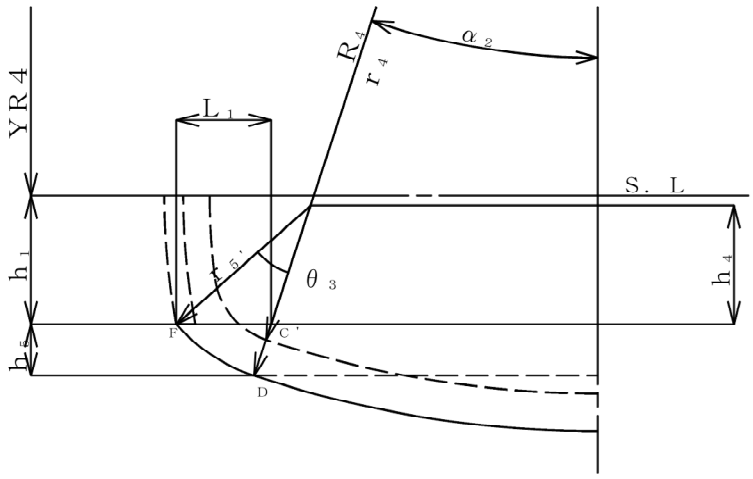

R_4 = 13.97000, r_5' = 2.374080, 覆工厚 t_0' = 0.500, h_1 = 1.700

α_2 = 18°3218569

諸元寸法より　YR4 = 11.356540, Dx = 4.548711, Dy = 2.379912

C'x = 4.323564, Fx = 5.579867

h_4 = 1.573816, θ_3 = 30°1554862

r_4 = R_4 + t_0' = 13.97000 + 0.500 = 14.47000

h_5 = Dy − h_1 = 2.379912 − 1.700 = 0.679912

L_1 = Fx − C'x = 5.579867 − 4.323564 = 1.256303

Vc-1 = (π × $r_5'^2$ × θ_3 / 360° − 1/2 × L_1 × h_4) × 2

= (π × 2.374080^2 × 30°1554862 / 360°

− 1/2 × 1.256303 × 1.573816) × 2 = 0.989242

Vc-2 = 1/2 × (C'x + Dx) × h_5 × 2

= 1/2 × (4.323564 + 4.548711) × 0.679912 × 2 = 6.032366

Vc-3 = { π × r_4^2 × α_2 / 360° − 1/2 ×Dx× (YR4 + Dy) } × 2

= { π × 14.47000^2 × 18°3218569 / 360°

− 1/2 × 4.548711 ×(11.356540 + 2.379912) } × 2 = 4.471989

Vc = Vc-1 + Vc-2 + Vc-3

= 0.989242 + 6.032366 + 4.471989 = 11.493597

= 11.494 m^3／m

（２）　支払断面

ａ．上部半断面

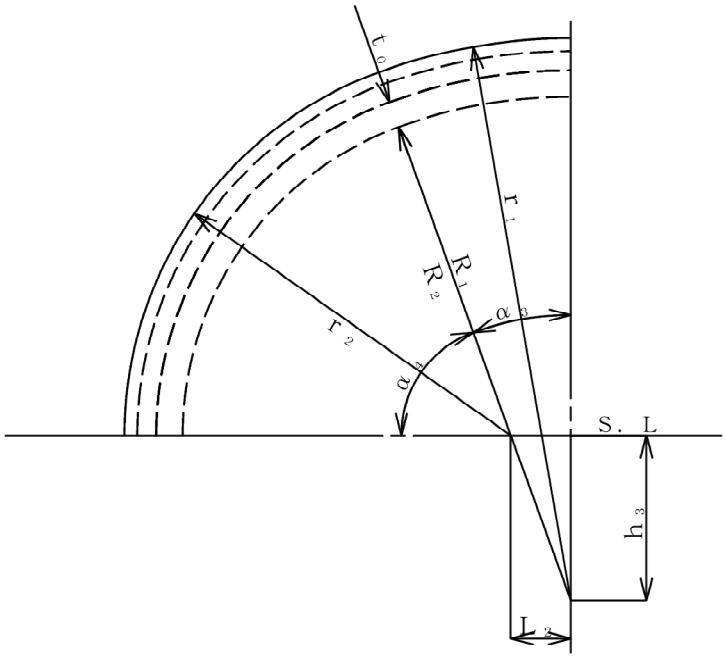

R_1 = 6.670, R_2 = 4.340, 覆工厚 t_0 = 0.350
変形余裕量 t_1 = 0.000, 吹付厚 t_2 = 0.250
余掘 t = 0.170
α_3 = 20°.0000000, α_4 = 70°.0000000
諸元寸法より　　L_2 = 0.796907, h_3 = 2.189484

$r_1 = R_1 + t_0 + t_1 + t_2 + t$
$= 6.670 + 0.350 + 0.000 + 0.250 + 0.170 = 7.440$
$r_2 = R_2 + t_0 + t_1 + t_2 + t$
$= 4.340 + 0.350 + 0.000 + 0.250 + 0.170 = 5.110$

$Vsa\text{-}1 = (\pi \times r_1^2 \times \alpha_3 / 360° - 1/2 \times L_2 \times h_3) \times 2$
$= (\pi \times 7.440^2 \times 20°.0000000 / 360°$
$- 1/2 \times 0.796907 \times 2.189484) \times 2 = 17.577236$
$Vsa\text{-}2 = \pi \times r_2^2 \times \alpha_4 / 360° \times 2$
$= \pi \times 5.110^2 \times 70°.0000000 / 360° \times 2 = 31.901948$

$Vsa = Vsa\text{-}1 + Vsa\text{-}2 = 17.577236 + 31.901948 = 49.479184$
$= 49.479\ m^3/m$

b．下部半断面

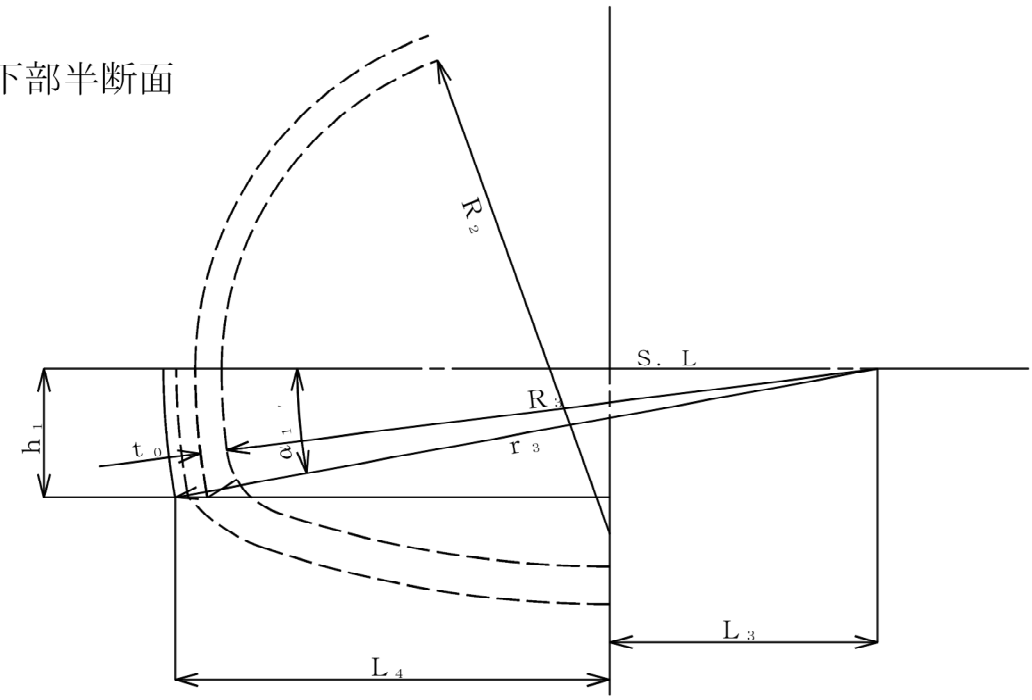

R_2 = 4.340, R_3 = 8.680, 覆工厚 t_0 = 0.350
変形余裕量 t_1 = 0.000, 吹付厚 t_2 = 0.250
余掘 t = 0.170, h_1 = 1.700
諸元寸法より　　L_3 = 3.543093

$$r_3 = R_3 + t_0 + t_1 + t_2 + t$$
$$= 8.680 + 0.350 + 0.000 + 0.250 + 0.170 = 9.450$$

$$L_4 = \sqrt{r_3^2 - h_1^2} - L_3 = \sqrt{9.450^2 - 1.700^2} - 3.543093 = 5.752739$$

$$\alpha_1' = \sin^{-1}\frac{h_1}{r_3} = \sin^{-1}\frac{1.700}{9.450} = 10.^\circ 3635961$$

$$Vsb\text{-}1 = \pi \times r_3^2 \times \alpha_1' / 360^\circ - 1/2 \times (L_3 + L_4) \times h_1$$
$$= \pi \times 9.450^2 \times 10.^\circ 3635961 / 360^\circ - 1/2 \times (3.543093 + 5.752739) \times 1.700 = 0.175011$$

$$Vsb\text{-}2 = L_4 \times h_1 = 5.752739 \times 1.700 = 9.779656$$

$$Vsb = (Vsb\text{-}1 + Vsb\text{-}2) \times 2$$
$$= (0.175011 + 9.779656) \times 2 = 19.909334$$
$$= 19.909\ m^3/m$$

c．インバート掘削

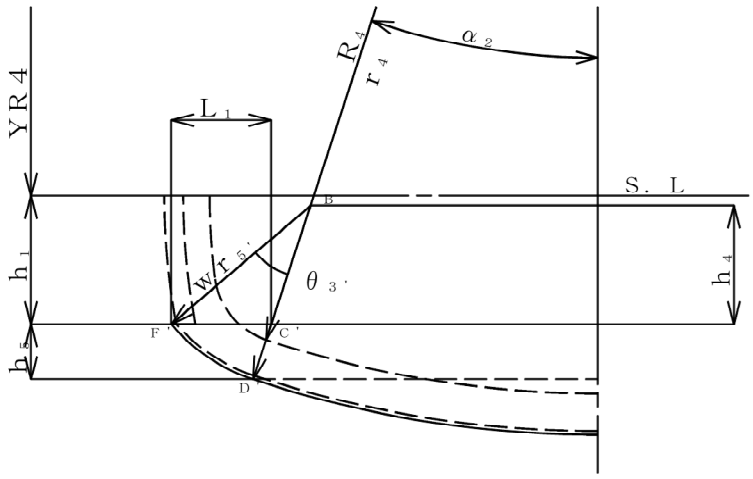

R_4 = 13.97000, r_5' = 2.374080, 覆工厚 t_0' = 0.500, 余掘 t = 0.050

h_1 = 1.700, α_2 = 18°3218569

諸元寸法より　YR4 = 11.356540, Bx = 3.802408, C'x = 4.323564

h_4 = 1.573816

$r_4 = R_4 + t_0' + t = 13.97000 + 0.500 + 0.050 = 14.52000$

$wr_5' = r_5' + t = 2.374080 + 0.050 = 2.424080$

$$\theta_3' = \mathrm{Cos}^{-1}\frac{h_4}{wr_5'} - \alpha_2 = \mathrm{Cos}^{-1}\frac{1.573816}{2.424080} - 18^\circ3218569 = 31^\circ1936217$$

$D'x = r_4 \times \mathrm{Sin}\ \alpha_2 = 14.52000 \times \mathrm{Sin}\ 18^\circ3218569 = 4.564429$

$D'y = r_4 \times \mathrm{Cos}\ \alpha_2 - YR4$

$= 14.52000 \times \mathrm{Cos}\ 18^\circ3218569 - 11.356540 = 2.427378$

$F'x = Bx + wr_5' \times \mathrm{Sin}(\theta_3' + \alpha_2)$

$= 3.802408 + 2.424080 \times \mathrm{Sin}(31^\circ1936217 + 18^\circ3218569) = 5.646118$

$h_5 = D'y - h_1 = 2.427378 - 1.700 = 0.727378$

$L_1 = F'x - C'x = 5.646118 - 4.323564 = 1.322554$

$Vsc\text{-}1 = (\pi \times wr_5'^2 \times \theta_3' / 360^\circ - 1/2 \times L_1 \times h_4) \times 2$

$= (\pi \times 2.424080^2 \times 31^\circ1936217 / 360^\circ$

$- 1/2 \times 1.322554 \times 1.573816) \times 2 = 1.117711$

$Vsc\text{-}2 = 1/2 \times (C'x + D'x) \times h_5 \times 2$

$= 1/2 \times (4.323564 + 4.564429) \times 0.727378 \times 2 = 6.464931$

$Vsc\text{-}3 = \{\pi \times r_4^2 \times \alpha_2 / 360^\circ - 1/2 \times D'x \times (YR4 + D'y)\} \times 2$

$= \{\pi \times 14.52000^2 \times 18^\circ3218569 / 360^\circ$

$- 1/2 \times 4.564429 \times (11.356540 + 2.427378)\} \times 2 = 4.502940$

$Vsc = Vsc\text{-}1 + Vsc\text{-}2 + Vsc\text{-}3$

$= 1.117711 + 6.464931 + 4.502940 = 12.085582$

$= 12.086\ m^3/m$

2）　吹付けコンクリート

a．上部半断面

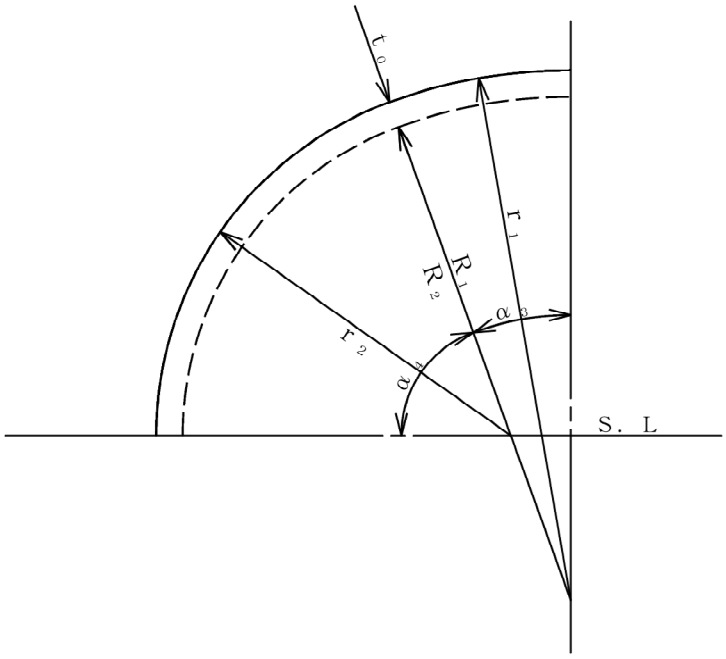

R_1 ＝ 6.670，R_2 ＝ 4.340，覆工厚 t_0 ＝ 0.350
変形余裕量 t_1 ＝ 0.000，吹付厚 t_2 ＝ 0.250
α_3 ＝ 20°.0000000，α_4 ＝ 70°.0000000

$r_1 = R_1 + t_0 + t_1 = 6.670 + 0.350 + 0.000 = 7.020$
$r_2 = R_2 + t_0 + t_1 = 4.340 + 0.350 + 0.000 = 4.690$

$Fa1 = 2\pi \times r_1 \times \alpha_3 / 360° \times 2$
$= 2\pi \times 7.020 \times 20°.0000000 / 360° \times 2 = 4.900885$
$Fa2 = 2\pi \times r_2 \times \alpha_4 / 360° \times 2$
$= 2\pi \times 4.690 \times 70°.0000000 / 360° \times 2 = 11.459832$

$Fa = Fa1 + Fa2 = 4.900885 + 11.459832 = 16.360717$
$= 16.361\ m^2/m$

b． 下部半断面

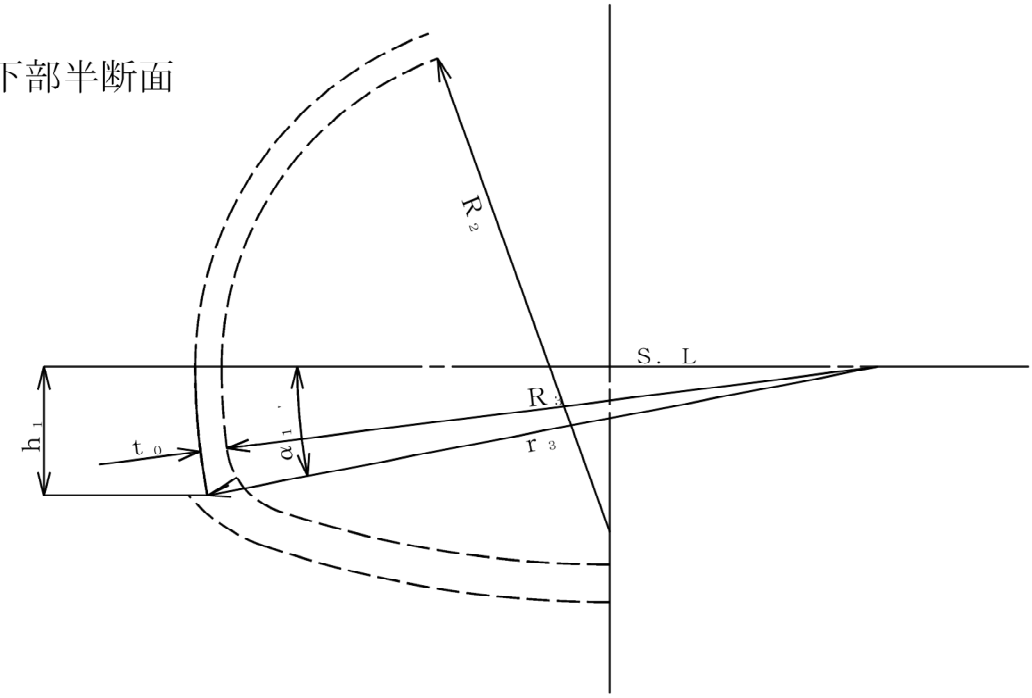

R_2 = 4.340, R_3 = 8.680, 覆工厚 t_0 = 0.350, h_1 = 1.700
変形余裕量 t_1 = 0.000, 吹付厚 t_2 = 0.250

$r_3 = R_3 + t_0 + t_1 = 8.680 + 0.350 + 0.000 = 9.030$

$\alpha_1' = \sin^{-1} \dfrac{h_1}{r_3} = \sin^{-1} \dfrac{1.700}{9.030} = 10.^{\circ}8513360$

$Fb = 2\pi \times r_3 \times \alpha_1' / 360^{\circ} \times 2$

$= 2\pi \times 9.030 \times 10.^{\circ}8513360 / 360^{\circ} \times 2 = 3.420411$

$= 3.420\ m^2/m$

3）　コンクリート

（1）　設計断面

a．覆工コンクリート

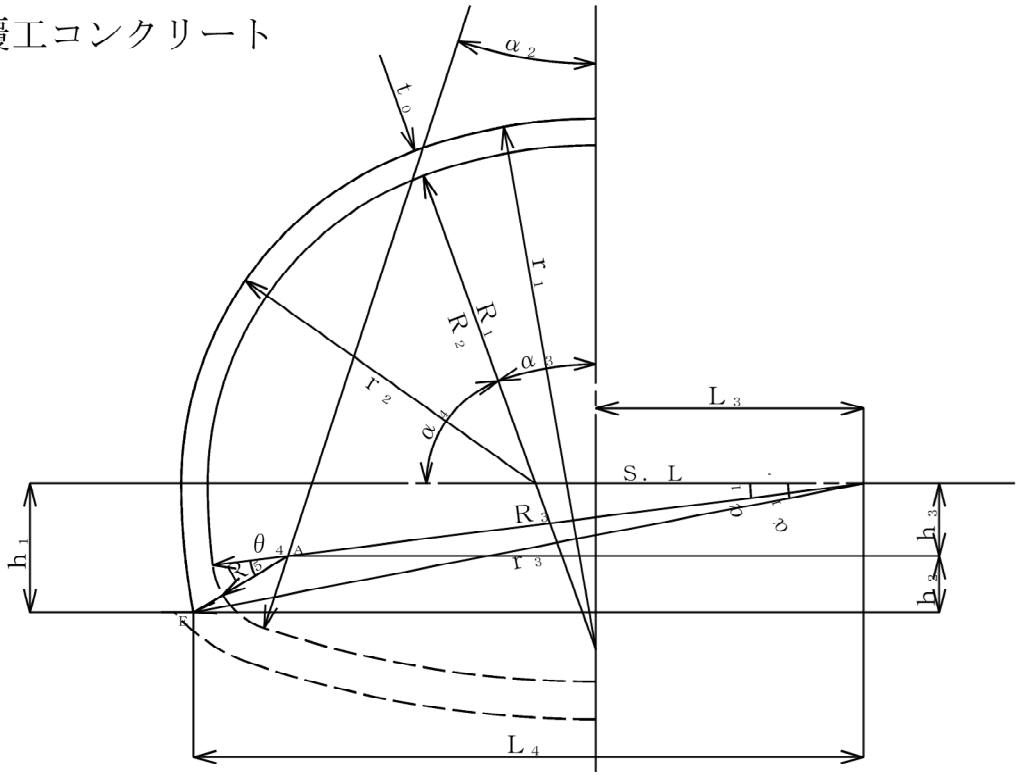

R_1 = 6.670, R_2 = 4.340, R_3 = 8.680, R_5 = 1.000

h_1 = 1.700, 覆工厚 t_0 = 0.350

α_1 = 7°.1503334, α_2 = 18°.3218569, α_3 = 20°.0000000, α_4 = 70°.0000000

諸元寸法より　　Ax = 4.077179, Ay = 0.955954, Ex = 5.325441

L_3 = 3.543093, h_2 = 0.744046, θ_2 = 23°.6473808

$r_1 = R_1 + t_0 = 6.670 + 0.350 = 7.020$

$r_2 = R_2 + t_0 = 4.340 + 0.350 = 4.690$

$r_3 = R_3 + t_0 = 8.680 + 0.350 = 9.030$

$h_3 = Ay = 0.955954$

$\alpha_1' = \sin^{-1}\dfrac{h_1}{r_3} = \sin^{-1}\dfrac{1.700}{9.030} = 10°.8513360$

$\theta_4 = \theta_2 = 23°.6473808$

$L_4 = r_3 \times \cos\alpha_1' = 9.030 \times \cos 10°.8513360 = 8.868534$

アーチ部

$\upsilon_1 = \pi \times (r_1^2 - R_1^2) \times \alpha_3 / 360^\circ \times 2$

$= \pi \times (7.020^2 - 6.670^2) \times 20.0000000^\circ / 360^\circ \times 2 = 1.672549$

$\upsilon_2 = \pi \times (r_2^2 - R_2^2) \times \alpha_4 / 360^\circ \times 2$

$= \pi \times (4.690^2 - 4.340^2) \times 70.0000000^\circ / 360^\circ \times 2 = 3.861279$

$V_1 = \upsilon_1 + \upsilon_2 = 1.672549 + 3.861279 = 5.533828$

側壁部

$\upsilon_1 = \pi \times r_3^2 \times \alpha_1' / 360^\circ$

$= \pi \times 9.030^2 \times 10.8513360^\circ / 360^\circ = 7.721578$

$\upsilon_2 = 1/2 \times h_1 \times L_4$

$= 1/2 \times 1.700 \times 8.868534 = 7.538254$

$\upsilon_3 = \pi \times R_3^2 \times \alpha_1 / 360^\circ$

$= \pi \times 8.680^2 \times 7.1503334^\circ / 360^\circ = 4.701247$

$\upsilon_4 = 1/2 \times (Ax + L_3) \times h_3$

$= 1/2 \times (4.077179 + 3.543093) \times 0.955954 = 3.642315$

$\upsilon_5 = 1/2 \times \{(Ax + L_3) + (Ex + L_3)\} \times h_2$

$= 1/2 \times \{(4.077179 + 3.543093) + (5.325441 + 3.543093)\} \times 0.744046$

$= 6.134215$

$\upsilon_6 = \pi \times R_5^2 \times \theta_4 / 360^\circ$

$= \pi \times 1.000^2 \times 23.6473808^\circ / 360^\circ = 0.206362$

$V_2 = \upsilon_1 + \upsilon_2 - (\upsilon_3 + \upsilon_4 + \upsilon_5 + \upsilon_6)$

$= 7.721578 + 7.538254$

$- (4.701247 + 3.642315 + 6.134215 + 0.206362) = 0.575693$

$V_{C1} = V_1 + V_2 \times 2 = 5.533828 + 0.575693 \times 2 = 6.685214$

$= 6.685\ m^3/m$

b．インバートコンクリート

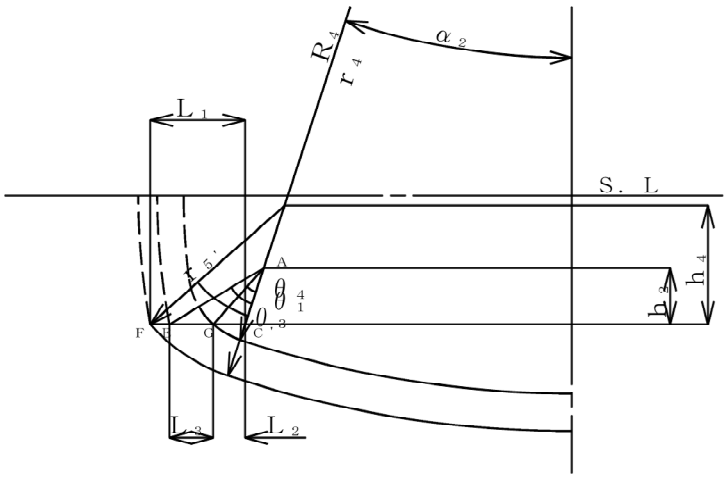

R_4 = 13.97000, R_5 = 1.000, r_5' = 2.374080, 覆工厚 t_0' = 0.500

α_2 = 18°3218569

Ax = 4.077179, C'x = 4.323564, Ex = 5.325441, Fx = 5.579867

h_2 = 0.744046, h_4 = 1.573816, θ_1 = 40°8804289, θ_3 = 30°1554862

$r_4 = R_4 + t_0'$ = 13.97000 + 0.500 = 14.47000

$Gx = Ax + \sqrt{R_5^2 - h_2^2} = 4.077179 + \sqrt{1.000^2 - 0.744046^2} = 4.745307$

$L_1 = Fx - C'x$ = 5.579867 − 4.323564 = 1.256303

$L_2 = Gx - C'x$ = 4.745307 − 4.323564 = 0.421743

$L_3 = Ex - Gx$ = 5.325441 − 4.745307 = 0.580134

$\theta_4 = \mathrm{Cos}^{-1}\dfrac{h_2}{R_5} - \alpha_2 = \mathrm{Cos}^{-1}\dfrac{0.744046}{1.000} - 18°3218569 = 23°6009202$

$\upsilon_1 = (\pi \times r_5'^2 \times \theta_3 / 360° - 1/2 \times L_1 \times h_4) \times 2$

$= (\pi \times 2.374080^2 \times 30°1554862 / 360° - 1/2 \times 1.256303 \times 1.573816) \times 2 = 0.989242$

$\upsilon_2 = (\pi \times R_5^2 \times \theta_4 / 360° - 1/2 \times L_2 \times h_2) \times 2$

$= (\pi \times 1.000^2 \times 23°6009202 / 360° - 1/2 \times 0.421743 \times 0.744046) \times 2 = 0.098118$

$\upsilon_3 = \{1/2 \times L_3 \times h_2 - \pi \times R_5^2 \times (\theta_1 - \theta_4) / 360°\} \times 2$

$= \{1/2 \times 0.580134 \times 0.744046 - \pi \times 1.000^2 \times (40°8804289 - 23°6009202) / 360°\} \times 2 = 0.130062$

$\upsilon_4 = \{\pi \times (r_4^2 - R_4^2) \times \alpha_2 / 360°\} \times 2$

$= \{\pi \times (14.47000^2 - 13.97000^2) \times 18°3218569 / 360°\} \times 2 = 4.547225$

$V_{C2} = \upsilon_1 - \upsilon_2 + \upsilon_3 + \upsilon_4$

= 0.989242 − 0.098118 + 0.130062 + 4.547225 = 5.568411

= 5.568 m^3／m

（２）　支払断面

ａ．覆工コンクリート

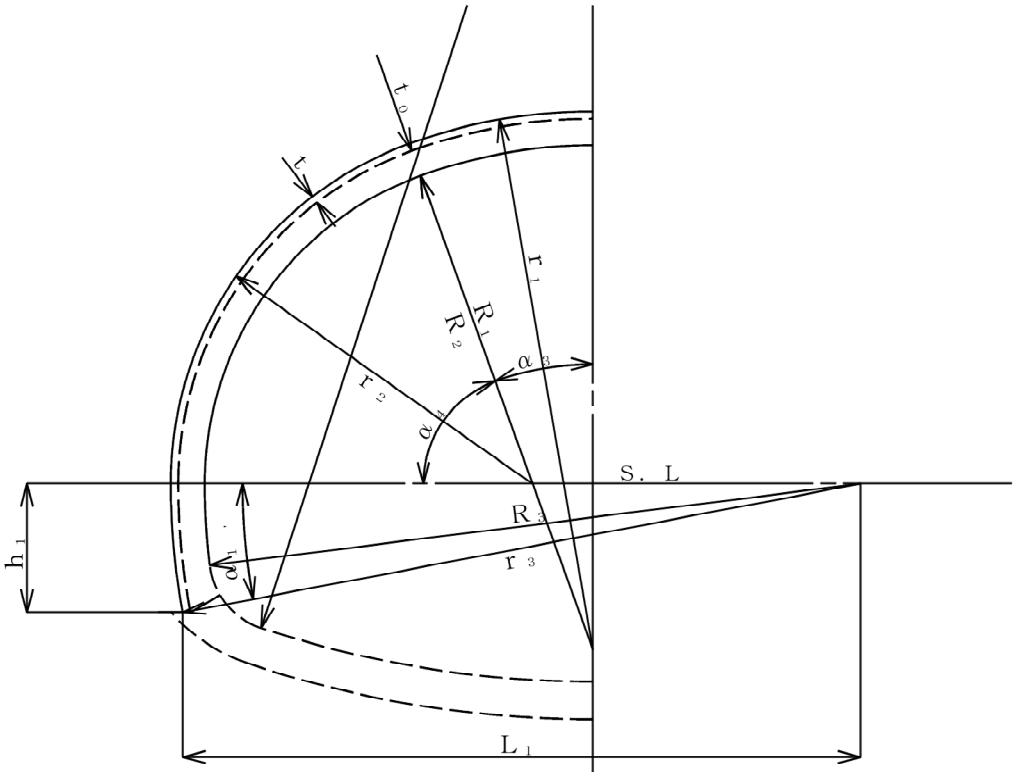

R_1 = 6.670, R_2 = 4.340, R_3 = 8.680

覆工厚 t_0 = 0.350, h_1 = 1.700

余巻 t = 0.100

α_1 = 7°.1503334, α_3 = 20°.0000000, α_4 = 70°.0000000

$r_1 = R_1 + t_0 + t = 6.670 + 0.350 + 0.100 = 7.120$

$r_2 = R_2 + t_0 + t = 4.340 + 0.350 + 0.100 = 4.790$

$r_3 = R_3 + t_0 + t = 8.680 + 0.350 + 0.100 = 9.130$

$\alpha_1' = \mathrm{Sin}^{-1} \dfrac{h_1}{r_3} = \mathrm{Sin}^{-1} \dfrac{1.700}{9.130} = 10°.7310647$

$L_1 = r_3 \times \mathrm{Cos}\ \alpha_1' = 9.130 \times \mathrm{Cos}\ 10°.7310647 = 8.970334$

アーチ部

υ_{S1} $= \pi \times (r_1^2 - R_1^2) \times \alpha_3 / 360^\circ \times 2$

$= \pi \times (7.120^2 - 6.670^2) \times 20.^\circ 0000000 / 360^\circ \times 2 = 2.166128$

υ_{S2} $= \pi \times (r_2^2 - R_2^2) \times \alpha_4 / 360^\circ \times 2$

$= \pi \times (4.790^2 - 4.340^2) \times 70.^\circ 0000000 / 360^\circ \times 2 = 5.019480$

V_{S1} $= \upsilon_{S1} + \upsilon_{S2} = 2.166128 + 5.019480 = 7.185608$

側壁部

υ_{S1} $= \pi \times r_3^2 \times \alpha_1' / 360^\circ$

$= \pi \times 9.130^2 \times 10.^\circ 7310647 / 360^\circ = 7.806057$

υ_{S2} $= 1/2 \times h_1 \times L_1$

$= 1/2 \times 1.700 \times 8.970334 = 7.624784$

υ_{S3} = 設計断面，覆工コンクリート側壁部 υ_3 ～ υ_6 の合計 = 14.684139

V_{S2} $= \upsilon_{S1} + \upsilon_{S2} - \upsilon_{S3}$

$= 7.806057 + 7.624784 - 14.684139 = 0.746702$

V_{CS1} $= V_{S1} + V_{S2} \times 2 = 7.185608 + 0.746702 \times 2 = 8.679012$

$= \underline{8.679\ m^3/m}$

b．インバートコンクリート

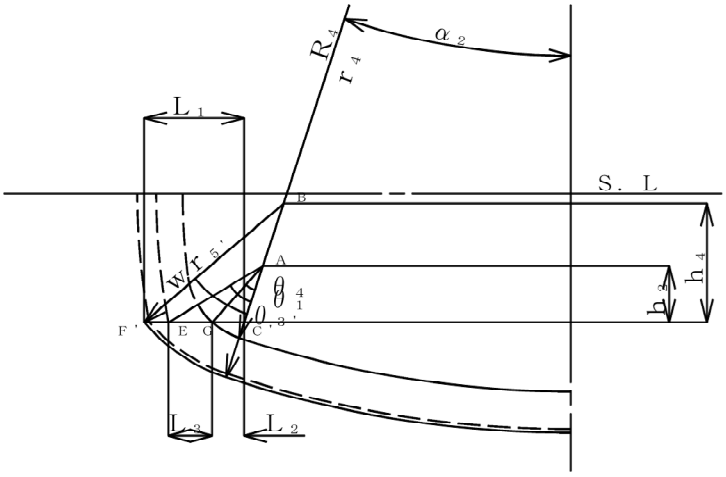

R_4 = 13.97000, R_5 = 1.000, r_5' = 2.374080

覆工厚 t_0' = 0.500, 余巻 t = 0.050, α_2 = 18°3218569

諸元寸法より　h_2 = 0.744046, h_4 = 1.573816, θ_1 = 40°8804289

Ax = 4.077179, Bx = 3.802408, C'x = 4.323564

Ex = 5.325441

$r_4 = R_4 + t_0' + t = 13.97000 + 0.500 + 0.050 = 14.52000$

$wr_5' = r_5' + t = 2.374080 + 0.050 = 2.424080$

$$F'x = Bx + \sqrt{wr_5'^2 - h_4^2} = 3.802408 + \sqrt{2.424080^2 - 1.573816^2} = 5.646118$$

$$Gx = Ax + \sqrt{R_5^2 - h_2^2} = 4.077179 + \sqrt{1.000^2 - 0.744046^2} = 4.745307$$

$L_1 = F'x - C'x = 5.646118 - 4.323564 = 1.322554$

$L_2 = Gx - C'x = 4.745307 - 4.323564 = 0.421743$

$L_3 = Ex - Gx = 5.325441 - 4.745307 = 0.580134$

$$\theta_3' = \mathrm{Cos}^{-1}\frac{h_4}{wr_5'} - \alpha_2 = \mathrm{Cos}^{-1}\frac{1.573816}{2.424080} - 18°3218569 = 31°1936217$$

$$\theta_4 = \mathrm{Cos}^{-1}\frac{h_2}{R_5} - \alpha_2 = \mathrm{Cos}^{-1}\frac{0.744046}{1.000} - 18°3218569 = 23°6009202$$

$$\upsilon_1 = (\pi \times wr_5'^2 \times \theta_3' / 360^\circ - 1/2 \times L_1 \times h_4) \times 2$$
$$= (\pi \times 2.424080^2 \times 31.^\circ 1936217 / 360^\circ - 1/2 \times 1.322554 \times 1.573816) \times 2 = 1.117711$$
$$\upsilon_2 = (\pi \times R_5^2 \times \theta_4 / 360^\circ - 1/2 \times L_2 \times h_2) \times 2$$
$$= (\pi \times 1.000^2 \times 23.^\circ 6009202 / 360^\circ - 1/2 \times 0.421743 \times 0.744046) \times 2 = 0.098118$$
$$\upsilon_3 = \{1/2 \times L_3 \times h_2 - \pi \times R_5^2 \times (\theta_1 - \theta_4) / 360^\circ\} \times 2$$
$$= \{1/2 \times 0.580134 \times 0.744046 - \pi \times 1.000^2 \times (40.^\circ 8804289 - 23.^\circ 6009202) / 360^\circ\} \times 2 = 0.130062$$
$$\upsilon_4 = \pi \times (r_4^2 - R_4^2) \times \alpha_2 / 360^\circ \times 2$$
$$= \pi \times (14.52000^2 - 13.97000^2) \times 18.^\circ 3218569 / 360^\circ \times 2 = 5.010741$$

$$V_{CS2} = \upsilon_1 - \upsilon_2 + \upsilon_3 + \upsilon_4$$
$$= 1.117711 - 0.098118 + 0.130062 + 5.010741 = 6.160396$$
$$= \underline{6.160\ m^3/m}$$

4） 型 枠

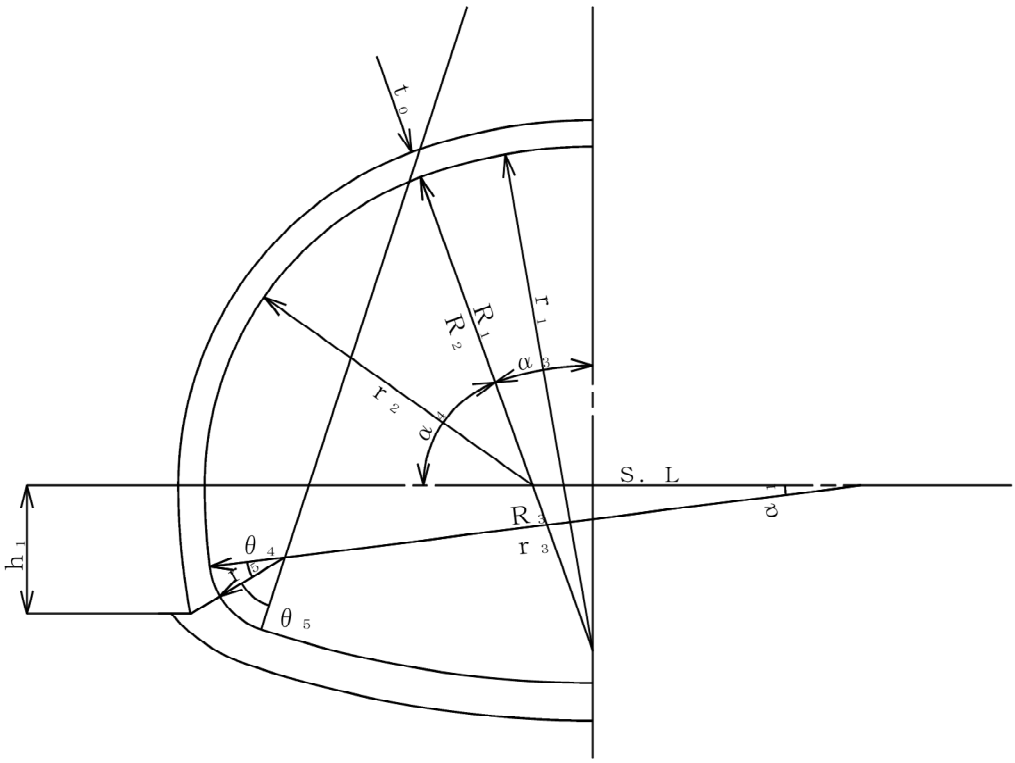

R_1 = 6.670, R_2 = 4.340, R_3 = 8.680, R_5 = 1.000

覆工厚 t_0 = 0.350, h_1 = 1.700, 型枠妻板控除 t_1 = 0.000

α_1 = 7°.1503334, α_3 = 20°.0000000, α_4 = 70°.0000000

θ_4 = 設計断面の覆工コンクリートより = 23°.6473808

θ_5 = 諸元寸法より（θ_1） = 40°.8804289

r_1 = R_1 + (t_1 / 2) = 6.670 + (0.000 / 2) = 6.670

r_2 = R_2 + (t_1 / 2) = 4.340 + (0.000 / 2) = 4.340

r_3 = R_3 + (t_1 / 2) = 8.680 + (0.000 / 2) = 8.680

r_5 = R_5 + (t_1 / 2) = 1.000 + (0.000 / 2) = 1.000

V_{C1} = 設計断面の覆工コンクリートより = 6.685214

V_{CS1} = 支払断面の覆工コンクリートより = 8.679012

V_{C2} = 設計断面のインバートコンクリートより = 5.568411

V_{CS2} = 支払断面のインバートコンクリートより = 6.160396

＜全巻＞

内面 $= (2\pi \times R_1 \times \alpha_3 / 360^\circ + 2\pi \times R_2 \times \alpha_4 / 360^\circ$

$+ 2\pi \times R_3 \times \alpha_1 / 360^\circ + 2\pi \times R_5 \times \theta_4 / 360^\circ) \times 2$

$= (2\pi \times 6.670 \times 20.0000000^\circ / 360^\circ$

$+ 2\pi \times 4.340 \times 70.0000000^\circ / 360^\circ$

$+ 2\pi \times 8.680 \times 7.1503334^\circ / 360^\circ$

$+ 2\pi \times 1.000 \times 23.6473808^\circ / 360^\circ) \times 2 = 18.253082$

$= \underline{18.253\ m^2／m}$

妻板 $= V_{C1} - (2\pi \times r_1 \times \alpha_3 / 360^\circ + 2\pi \times r_2 \times \alpha_4 / 360^\circ$

(設計) $+ 2\pi \times r_3 \times \alpha_1 / 360^\circ + 2\pi \times r_5 \times \theta_4 / 360^\circ) \times t_1 \times 2$

$= 6.685214 - (2\pi \times 6.670 \times 20.0000000^\circ / 360^\circ$

$+ 2\pi \times 4.340 \times 70.0000000^\circ / 360^\circ$

$+ 2\pi \times 8.680 \times 7.1503334^\circ / 360^\circ$

$+ 2\pi \times 1.000 \times 23.6473808^\circ / 360^\circ) \times 0.000 \times 2 = 6.685214$

$= \underline{6.685\ m^2／ヶ所}$

妻板 $= V_{CS1} - (2\pi \times r_1 \times \alpha_3 / 360^\circ + 2\pi \times r_2 \times \alpha_4 / 360^\circ$

(支払) $+ 2\pi \times r_3 \times \alpha_1 / 360^\circ + 2\pi \times r_5 \times \theta_4 / 360^\circ) \times t_1 \times 2$

$= 8.679012 - (2\pi \times 6.670 \times 20.0000000^\circ / 360^\circ$

$+ 2\pi \times 4.340 \times 70.0000000^\circ / 360^\circ$

$+ 2\pi \times 8.680 \times 7.1503334^\circ / 360^\circ$

$+ 2\pi \times 1.000 \times 23.6473808^\circ / 360^\circ) \times 0.000 \times 2 = 8.679012$

$= \underline{8.679\ m^2／ヶ所}$

＜インバート＞

内面 $= 2\pi \times R_5 \times \theta_5 / 360^\circ \times 2$

$= 2\pi \times 1.000 \times 40.8804289^\circ / 360^\circ \times 2 = 1.426996$

$= \underline{1.427\ m^2／m}$

妻板 = 設計断面のインバートコンクリートに同じ $= \underline{5.568\ m^2／ヶ所}$

(設計)

妻板 = 支払断面のインバートコンクリートに同じ $= \underline{6.160\ m^2／ヶ所}$

(支払)

5） 金 網

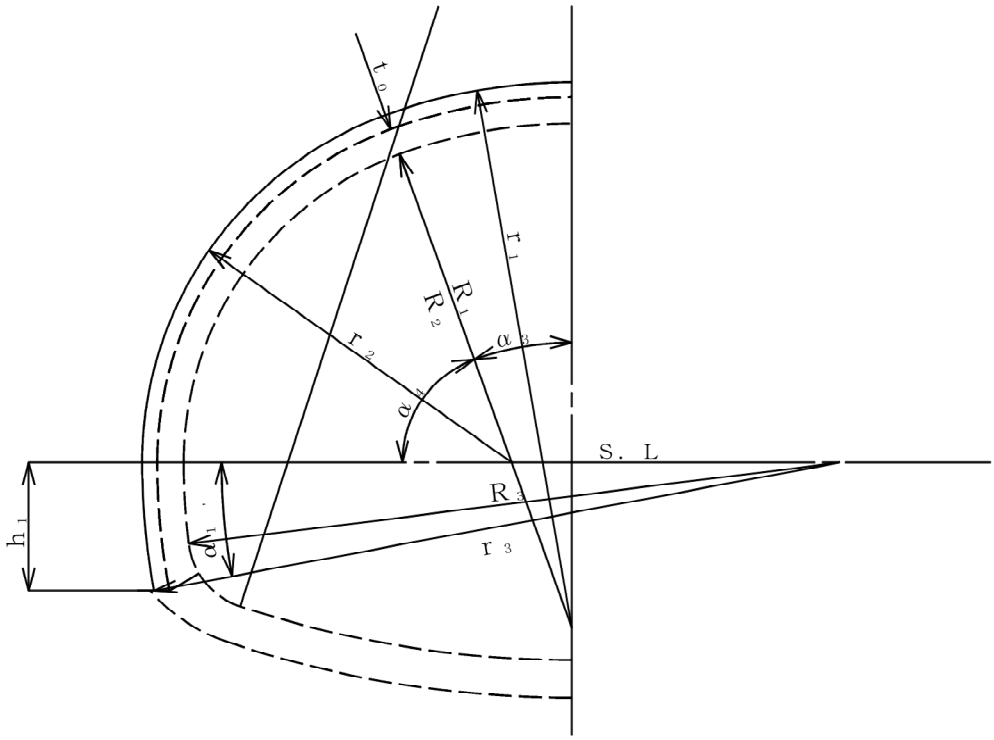

R_1 = 6.670, R_2 = 4.340, R_3 = 8.680, 覆工厚 t_0 = 0.350
変形余裕量(上半) t_1 = 0.000, (下半) t_2 = 0.000
吹き付け厚(２次) t_3 = 0.200, h_1 = 1.700
α_3 = 20°.0000000, α_4 = 70°.0000000

$r_1 = R_1 + t_0 + t_1 + t_3$
$= 6.670 + 0.350 + 0.000 + 0.200 = 7.220$

$r_2 = R_2 + t_0 + t_1 + t_3$
$= 4.340 + 0.350 + 0.000 + 0.200 = 4.890$

$r_3 = R_3 + t_0 + t_2 + t_3$
$= 8.680 + 0.350 + 0.000 + 0.200 = 9.230$

$\alpha_1' = \sin^{-1} \dfrac{h_1}{r_3} = \sin^{-1} \dfrac{1.700}{9.230} = 10°.6134458$

上半 = ($2\pi \times r_1 \times \alpha_3 / 360^\circ + 2\pi \times r_2 \times \alpha_4 / 360^\circ$) × 2

= ($2\pi \times 7.220 \times 20^\circ.0000000 / 360^\circ$

$+ 2\pi \times 4.890 \times 70^\circ.0000000 / 360^\circ$) × 2 = 16.989035

= 16.989 m^2／m

下半 = $2\pi \times r_3 \times \alpha_1' / 360^\circ \times 2$

= $2\pi \times 9.230 \times 10^\circ.6134458 / 360^\circ \times 2$ = 3.419523

= 3.420 m^2／m

合計 = 上半 + 下半 = 16.989 + 3.420 = 20.409

= 20.409 m^2／m

b．インバートコンクリート

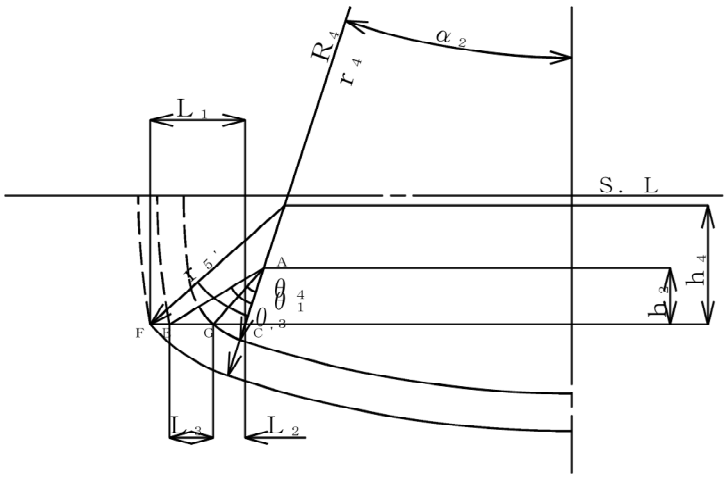

R_4 = 13.97000, R_5 = 1.000, r_5' = 2.374080, 覆工厚 t_0' = 0.500

α_2 = 18°3218569

Ax = 4.077179, C'x = 4.323564, Ex = 5.325441, Fx = 5.579867

h_2 = 0.744046, h_4 = 1.573816, θ_1 = 40°8804289, θ_3 = 30°1554862

$r_4 = R_4 + t_0'$ = 13.97000 + 0.500 = 14.47000

$Gx = Ax + \sqrt{R_5^2 - h_2^2} = 4.077179 + \sqrt{1.000^2 - 0.744046^2} = 4.745307$

$L_1 = Fx - C'x$ = 5.579867 − 4.323564 = 1.256303

$L_2 = Gx - C'x$ = 4.745307 − 4.323564 = 0.421743

$L_3 = Ex - Gx$ = 5.325441 − 4.745307 = 0.580134

$\theta_4 = \mathrm{Cos}^{-1}\dfrac{h_2}{R_5} - \alpha_2 = \mathrm{Cos}^{-1}\dfrac{0.744046}{1.000} - 18°3218569 = 23°6009202$

$\upsilon_1 = (\pi \times r_5'^2 \times \theta_3 / 360° - 1/2 \times L_1 \times h_4) \times 2$

$= (\pi \times 2.374080^2 \times 30°1554862 / 360° - 1/2 \times 1.256303 \times 1.573816) \times 2 = 0.989242$

$\upsilon_2 = (\pi \times R_5^2 \times \theta_4 / 360° - 1/2 \times L_2 \times h_2) \times 2$

$= (\pi \times 1.000^2 \times 23°6009202 / 360° - 1/2 \times 0.421743 \times 0.744046) \times 2 = 0.098118$

$\upsilon_3 = \{1/2 \times L_3 \times h_2 - \pi \times R_5^2 \times (\theta_1 - \theta_4) / 360°\} \times 2$

$= \{1/2 \times 0.580134 \times 0.744046 - \pi \times 1.000^2 \times (40°8804289 - 23°6009202) / 360°\} \times 2 = 0.130062$

$\upsilon_4 = \{\pi \times (r_4^2 - R_4^2) \times \alpha_2 / 360°\} \times 2$

$= \{\pi \times (14.47000^2 - 13.97000^2) \times 18°3218569 / 360°\} \times 2 = 4.547225$

$V_{C2} = \upsilon_1 - \upsilon_2 + \upsilon_3 + \upsilon_4$

= 0.989242 − 0.098118 + 0.130062 + 4.547225 = 5.568411

= 5.568 m^3／m

（２）　支払断面

ａ．覆工コンクリート

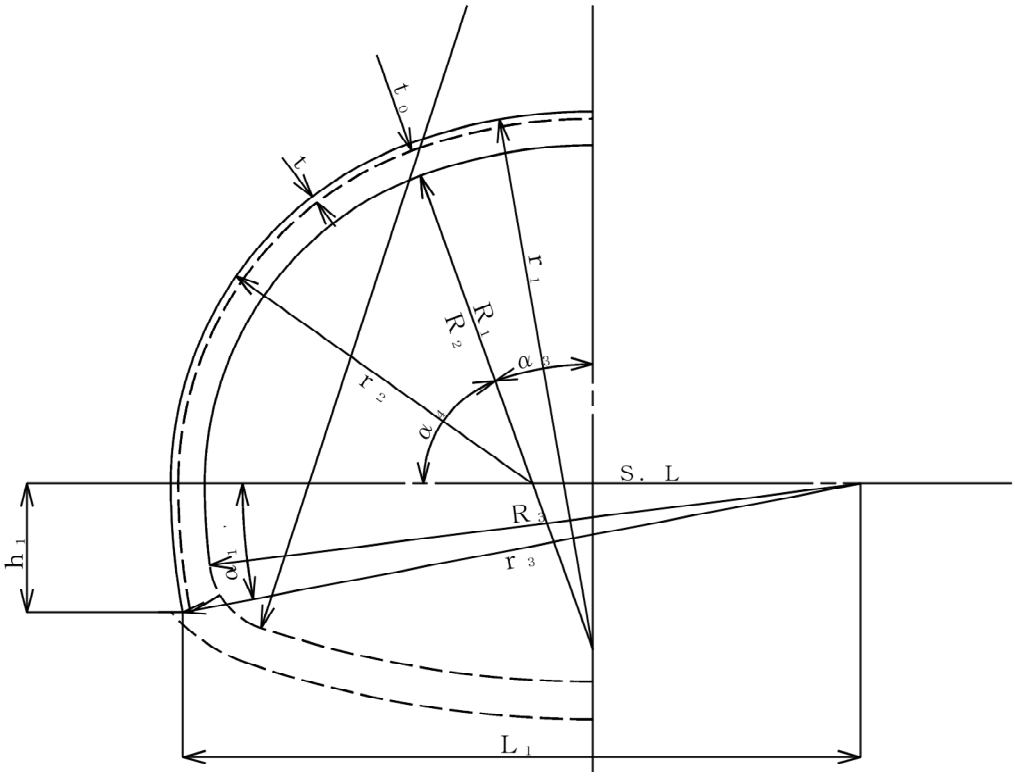

R_1 = 6.670, R_2 = 4.340, R_3 = 8.680

覆工厚 t_0 = 0.350, h_1 = 1.700

余巻 t = 0.100

α_1 = 7°.1503334, α_3 = 20°.0000000, α_4 = 70°.0000000

$r_1 = R_1 + t_0 + t = 6.670 + 0.350 + 0.100 = 7.120$

$r_2 = R_2 + t_0 + t = 4.340 + 0.350 + 0.100 = 4.790$

$r_3 = R_3 + t_0 + t = 8.680 + 0.350 + 0.100 = 9.130$

$\alpha_1' = \mathrm{Sin}^{-1} \dfrac{h_1}{r_3} = \mathrm{Sin}^{-1} \dfrac{1.700}{9.130} = 10°.7310647$

$L_1 = r_3 \times \mathrm{Cos}\ \alpha_1' = 9.130 \times \mathrm{Cos}\ 10°.7310647 = 8.970334$

アーチ部

υ_{S1} $= \pi \times (r_1^2 - R_1^2) \times \alpha_3 / 360^\circ \times 2$

$= \pi \times (7.120^2 - 6.670^2) \times 20.^\circ 0000000 / 360^\circ \times 2 = 2.166128$

υ_{S2} $= \pi \times (r_2^2 - R_2^2) \times \alpha_4 / 360^\circ \times 2$

$= \pi \times (4.790^2 - 4.340^2) \times 70.^\circ 0000000 / 360^\circ \times 2 = 5.019480$

V_{S1} $= \upsilon_{S1} + \upsilon_{S2} = 2.166128 + 5.019480 = 7.185608$

側壁部

υ_{S1} $= \pi \times r_3^2 \times \alpha_1' / 360^\circ$

$= \pi \times 9.130^2 \times 10.^\circ 7310647 / 360^\circ = 7.806057$

υ_{S2} $= 1/2 \times h_1 \times L_1$

$= 1/2 \times 1.700 \times 8.970334 = 7.624784$

υ_{S3} = 設計断面，覆工コンクリート側壁部 υ_3 ～ υ_6 の合計 = 14.684139

V_{S2} $= \upsilon_{S1} + \upsilon_{S2} - \upsilon_{S3}$

$= 7.806057 + 7.624784 - 14.684139 = 0.746702$

V_{CS1} $= V_{S1} + V_{S2} \times 2 = 7.185608 + 0.746702 \times 2 = 8.679012$

$= \underline{8.679\ m^3/m}$

b．インバートコンクリート

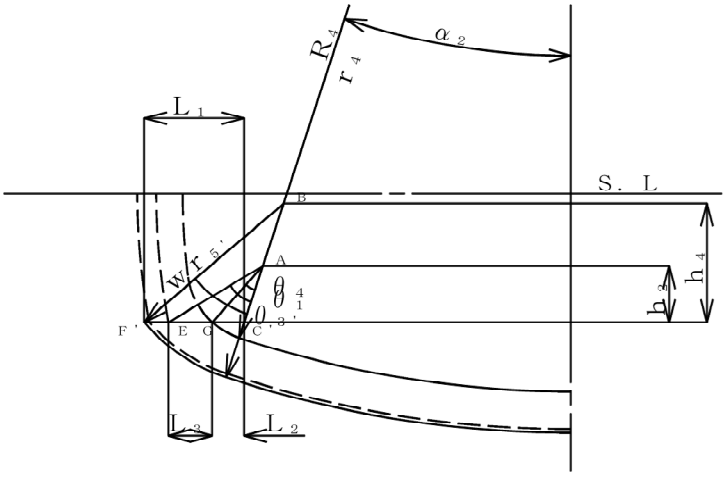

R_4 = 13.97000, R_5 = 1.000, r_5' = 2.374080

覆工厚 t_0' = 0.500, 余巻 t = 0.050, α_2 = 18°3218569

諸元寸法より　h_2 = 0.744046, h_4 = 1.573816, θ_1 = 40°8804289

Ax = 4.077179, Bx = 3.802408, C'x = 4.323564

Ex = 5.325441

$r_4 = R_4 + t_0' + t = 13.97000 + 0.500 + 0.050 = 14.52000$

$wr_5' = r_5' + t = 2.374080 + 0.050 = 2.424080$

$$F'x = Bx + \sqrt{wr_5'^2 - h_4^2} = 3.802408 + \sqrt{2.424080^2 - 1.573816^2} = 5.646118$$

$$Gx = Ax + \sqrt{R_5^2 - h_2^2} = 4.077179 + \sqrt{1.000^2 - 0.744046^2} = 4.745307$$

$L_1 = F'x - C'x = 5.646118 - 4.323564 = 1.322554$

$L_2 = Gx - C'x = 4.745307 - 4.323564 = 0.421743$

$L_3 = Ex - Gx = 5.325441 - 4.745307 = 0.580134$

$$\theta_3' = \mathrm{Cos}^{-1}\frac{h_4}{wr_5'} - \alpha_2 = \mathrm{Cos}^{-1}\frac{1.573816}{2.424080} - 18°3218569 = 31°1936217$$

$$\theta_4 = \mathrm{Cos}^{-1}\frac{h_2}{R_5} - \alpha_2 = \mathrm{Cos}^{-1}\frac{0.744046}{1.000} - 18°3218569 = 23°6009202$$

$$\upsilon_1 = (\pi \times wr_5'^2 \times \theta_3' / 360^\circ - 1/2 \times L_1 \times h_4) \times 2$$
$$= (\pi \times 2.424080^2 \times 31.^\circ 1936217 / 360^\circ - 1/2 \times 1.322554 \times 1.573816) \times 2 = 1.117711$$
$$\upsilon_2 = (\pi \times R_5^2 \times \theta_4 / 360^\circ - 1/2 \times L_2 \times h_2) \times 2$$
$$= (\pi \times 1.000^2 \times 23.^\circ 6009202 / 360^\circ - 1/2 \times 0.421743 \times 0.744046) \times 2 = 0.098118$$
$$\upsilon_3 = \{1/2 \times L_3 \times h_2 - \pi \times R_5^2 \times (\theta_1 - \theta_4) / 360^\circ\} \times 2$$
$$= \{1/2 \times 0.580134 \times 0.744046 - \pi \times 1.000^2 \times (40.^\circ 8804289 - 23.^\circ 6009202) / 360^\circ\} \times 2 = 0.130062$$
$$\upsilon_4 = \pi \times (r_4^2 - R_4^2) \times \alpha_2 / 360^\circ \times 2$$
$$= \pi \times (14.52000^2 - 13.97000^2) \times 18.^\circ 3218569 / 360^\circ \times 2 = 5.010741$$

$$V_{CS2} = \upsilon_1 - \upsilon_2 + \upsilon_3 + \upsilon_4$$
$$= 1.117711 - 0.098118 + 0.130062 + 5.010741 = 6.160396$$
$$= \underline{6.160\ m^3/m}$$

4） 型 枠

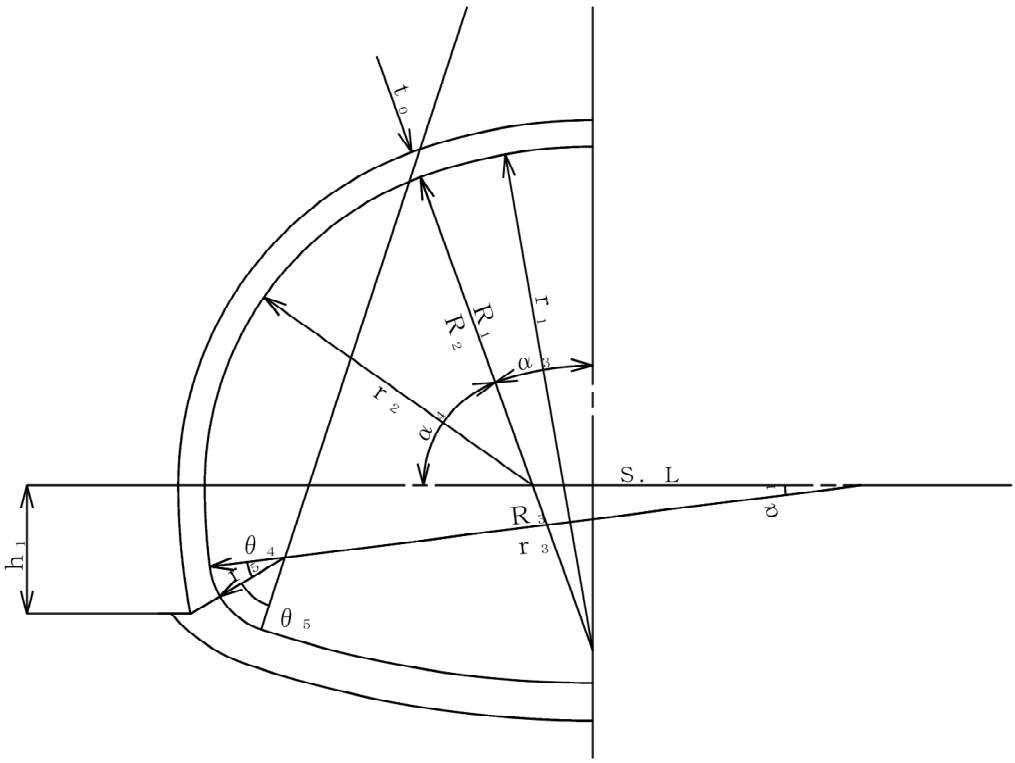

R_1 = 6.670, R_2 = 4.340, R_3 = 8.680, R_5 = 1.000

覆工厚 t_0 = 0.350, h_1 = 1.700, 型枠妻板控除 t_1 = 0.000

α_1 = 7°.1503334, α_3 = 20°.0000000, α_4 = 70°.0000000

θ_4 = 設計断面の覆工コンクリートより = 23°.6473808

θ_5 = 諸元寸法より（θ_1） = 40°.8804289

r_1 = R_1 + (t_1 / 2) = 6.670 + (0.000 / 2) = 6.670

r_2 = R_2 + (t_1 / 2) = 4.340 + (0.000 / 2) = 4.340

r_3 = R_3 + (t_1 / 2) = 8.680 + (0.000 / 2) = 8.680

r_5 = R_5 + (t_1 / 2) = 1.000 + (0.000 / 2) = 1.000

V_{C1} = 設計断面の覆工コンクリートより = 6.685214

V_{CS1} = 支払断面の覆工コンクリートより = 8.679012

V_{C2} = 設計断面のインバートコンクリートより = 5.568411

V_{CS2} = 支払断面のインバートコンクリートより = 6.160396

＜全巻＞

内面 $= (2\pi \times R_1 \times \alpha_3 / 360^\circ + 2\pi \times R_2 \times \alpha_4 / 360^\circ$

$+ 2\pi \times R_3 \times \alpha_1 / 360^\circ + 2\pi \times R_5 \times \theta_4 / 360^\circ) \times 2$

$= (2\pi \times 6.670 \times 20.0000000^\circ / 360^\circ$

$+ 2\pi \times 4.340 \times 70.0000000^\circ / 360^\circ$

$+ 2\pi \times 8.680 \times 7.1503334^\circ / 360^\circ$

$+ 2\pi \times 1.000 \times 23.6473808^\circ / 360^\circ) \times 2 = 18.253082$

$= \underline{18.253\ m^2／m}$

妻板 $= V_{C1} - (2\pi \times r_1 \times \alpha_3 / 360^\circ + 2\pi \times r_2 \times \alpha_4 / 360^\circ$

(設計) $+ 2\pi \times r_3 \times \alpha_1 / 360^\circ + 2\pi \times r_5 \times \theta_4 / 360^\circ) \times t_1 \times 2$

$= 6.685214 - (2\pi \times 6.670 \times 20.0000000^\circ / 360^\circ$

$+ 2\pi \times 4.340 \times 70.0000000^\circ / 360^\circ$

$+ 2\pi \times 8.680 \times 7.1503334^\circ / 360^\circ$

$+ 2\pi \times 1.000 \times 23.6473808^\circ / 360^\circ) \times 0.000 \times 2 = 6.685214$

$= \underline{6.685\ m^2／ヶ所}$

妻板 $= V_{CS1} - (2\pi \times r_1 \times \alpha_3 / 360^\circ + 2\pi \times r_2 \times \alpha_4 / 360^\circ$

(支払) $+ 2\pi \times r_3 \times \alpha_1 / 360^\circ + 2\pi \times r_5 \times \theta_4 / 360^\circ) \times t_1 \times 2$

$= 8.679012 - (2\pi \times 6.670 \times 20.0000000^\circ / 360^\circ$

$+ 2\pi \times 4.340 \times 70.0000000^\circ / 360^\circ$

$+ 2\pi \times 8.680 \times 7.1503334^\circ / 360^\circ$

$+ 2\pi \times 1.000 \times 23.6473808^\circ / 360^\circ) \times 0.000 \times 2 = 8.679012$

$= \underline{8.679\ m^2／ヶ所}$

＜インバート＞

内面 $= 2\pi \times R_5 \times \theta_5 / 360^\circ \times 2$

$= 2\pi \times 1.000 \times 40.8804289^\circ / 360^\circ \times 2 = 1.426996$

$= \underline{1.427\ m^2／m}$

妻板 = 設計断面のインバートコンクリートに同じ $= \underline{5.568\ m^2／ヶ所}$

(設計)

妻板 = 支払断面のインバートコンクリートに同じ $= \underline{6.160\ m^2／ヶ所}$

(支払)

5） 金 網

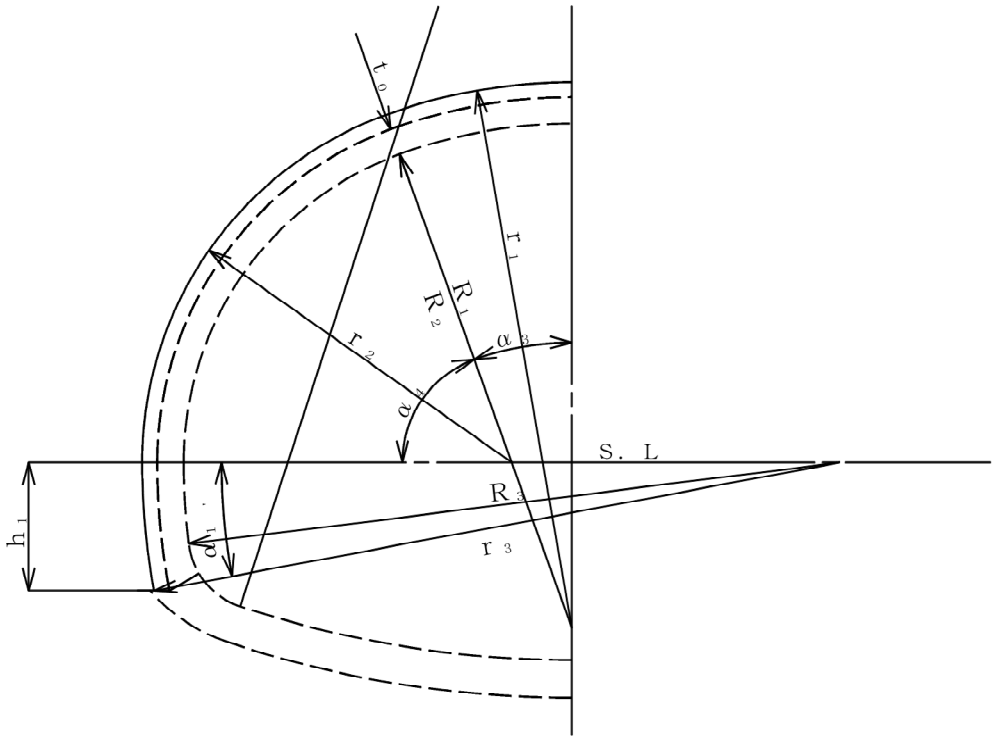

R_1 = 6.670, R_2 = 4.340, R_3 = 8.680, 覆工厚 t_0 = 0.350
変形余裕量(上半) t_1 = 0.000, (下半) t_2 = 0.000
吹き付け厚(２次) t_3 = 0.200, h_1 = 1.700
α_3 = 20°.0000000, α_4 = 70°.0000000

$r_1 = R_1 + t_0 + t_1 + t_3$
$= 6.670 + 0.350 + 0.000 + 0.200 = 7.220$

$r_2 = R_2 + t_0 + t_1 + t_3$
$= 4.340 + 0.350 + 0.000 + 0.200 = 4.890$

$r_3 = R_3 + t_0 + t_2 + t_3$
$= 8.680 + 0.350 + 0.000 + 0.200 = 9.230$

$\alpha_1' = \sin^{-1} \dfrac{h_1}{r_3} = \sin^{-1} \dfrac{1.700}{9.230} = 10°.6134458$

上半 = ($2\pi \times r_1 \times \alpha_3 / 360^\circ + 2\pi \times r_2 \times \alpha_4 / 360^\circ$) × 2

= ($2\pi \times 7.220 \times 20^\circ.0000000 / 360^\circ$

$+ 2\pi \times 4.890 \times 70^\circ.0000000 / 360^\circ$) × 2 = 16.989035

= 16.989 m^2／m

下半 = $2\pi \times r_3 \times \alpha_1' / 360^\circ \times 2$

= $2\pi \times 9.230 \times 10^\circ.6134458 / 360^\circ \times 2$ = 3.419523

= 3.420 m^2／m

合計 = 上半 + 下半 = 16.989 + 3.420 = 20.409

= 20.409 m^2／m